A G E N D A
CITY OF SEASIDE
PLANNING COMMISSION

REGULAR MEETING
440 HARCOURT AVE (COUNCIL CHAMBER)
Wednesday, September 24, 2025
6:00 PM

NOTICE: *The Planning Commission will hold its public meetings in person, with a virtual option for public participation based on availability. The City of Seaside utilizes Zoom tele-conferencing technology for virtual public participation; however, we make no representation or warranty of any kind, regarding the adequacy, reliability, or availability of the use of this platform in this manner. Participation by members of public through this means is at their own risk.*

1. To view this meeting: Please click on the following link to the City of Seaside YouTube Channel: https://www.youtube.com/c/CityofSeasideCalifornia

2. To view or participate in this meeting: Using the Zoom application on your smart phone, laptop, tablet or desktop and click on this link: https://us02web.zoom.us/j/81555467580
WEBINAR ID: 815 5546 7580

3. To listen or participate by phone: Please call (669) 900-9128
Enter the **WEBINAR ID:** 815 5546 7580 when prompted. There is no participate code – press the pound sign # after the recording prompts you.

4. To make public comment, the following options are available:

   Before the Meeting via Email: Written comments can be emailed to CityClerk@ci.seaside.ca.us Include the following subject line: "Public Comment Item #___" (insert the agenda item number relevant to your comment). Written comments must be received by 2:00 p.m. on the day of the meeting.

   During the Meeting: When the Chair calls for public comment, members of the public participating in person and wishing to address the Commission may approach the podium when the Chair calls for public comment.

   When the Chair calls for public comment, members of the public participating on Zoom and wishing to address the City Council can queue to speak with the "Raise Hand" feature. On the Zoom application, click the "Raise Hand" button. On the phone, press *9 to "Raise Hand"; press *6 to unmute.

5. In accordance with the City's Remote Meeting Participation Policy for Public Comment: The City of Seaside reserves the right to refuse, limit, and/or revoke use of video conferencing technology and the option for virtual public participation. Granting use of the virtual participation in no way constitutes an endorsement of any person or group to display hateful conduct, including sending or posting hateful images, making violent threats, or targeting others with hateful or abusive speech. The City may remove any participate that violates its agreement or applicable policy with proper notice as outlined in the conditions of use/meeting access.

1. CALL TO ORDER

2. ROLL CALL - PLANNING COMMISSION

William Silva	Chair
Keith Dodson	Commissioner
John Owens	Commissioner
Arlington La Mica	Commissioner
Dave Evans	Commissioner
Danny Huynh	Commissioner
Gonzalo Quintero Alcaraz	Commissioner

3. REVIEW OF AGENDA

If there are any items that arose after the 72-hour posting deadline, this is the point in the meeting where a vote may be taken to add the item to the agenda. (A 2/3-majority vote is required).

4. PUBLIC COMMENT

Members of the public wishing to address the Commission on matters within the jurisdiction of the City of Seaside, but not on this agenda, may do so during the Public Comment period for up to three (3) minutes. Comments on specific agenda items are heard under that item. For the public record, please state your name.

5. APPROVAL OF MINUTES

A. APPROVE MINUTES FROM JULY 9, 2025

6. BUSINESS ITEMS

A. USE PERMIT APPLICATION UP-2025-008. JAMES DILLON – JIM GISH INC., PROJECT APPLICANT, AND RYAN AND MEGAN BASSETT, PROPERTY OWNERS, REQUEST APPROVAL OF USE PERMIT APPLICATION UP-2025-008 FOR REDUCTION OF PARKING REQUIRED FOR ADDING 523 SQUARE FEET OF NEW FLOOR AREA TO THE EXISTING 918 SF SINGLE-FAMILY RESIDENCE AT 1372 MILITARY AVENUE (APN 011-036-010) IN THE RS-8 SINGLE-FAMILY RESIDENTIAL ZONING DISTRICT. THE PROJECT IS CATEGORICALLY EXEMPT (CLASS 1) FROM THE CALIFORNIA ENVIRONMENTAL QUALITY ACT (CEQA) PURSUANT TO SECTION 15301(E) OF THE CEQA GUIDELINES.

RECOMMENDATION: Staff recommends the Commission receive the presentation, consider the facts, drafted findings, and public comments, and approve, approve with conditions, or deny the Use Permit application.

B. SPECIFIC PLAN AMENDMENT SPA-2025-002. A RESOLUTION RECOMMENDING THAT THE SEASIDE CITY COUNCIL APPROVE AN AMENDMENT TO THE CAMPUS TOWN SPECIFIC PLAN MODIFYING THE REVIEW PROCESSES AND SUBMITTAL REQUIREMENTS FOR DEVELOPMENT APPLICATIONS. THE PROPOSED ACTION CONSISTS OF A

RECOMMENDATION ONLY AND IS THEREFORE NOT SUBJECT TO THE CALIFORNIA ENVIRONMENTAL QUALITY ACT (CEQA) PURSUANT TO SECTION 15061(B)(3) OF THE CEQA GUIDELINES.

RECOMMENDATION: Approve the proposed Resolution recommending that the City Council adopt SPA-25-02.

7. REPORTS FROM COMMISSIONERS

8. REPORTS FROM STAFF

This is a time specifically set aside for the Staff Liaison to provide updates on non-agendized requests from the Commission, and to provide brief information on topics under the purview of the Commission.

9. ADJOURNMENT

Next Regularly Scheduled Meeting:
October 8, 2025
6:00 PM

The City of Seaside is committed to providing accessible facilities and accommodating people with disabilities in all of its services programs and activities. If special considerations are needed by any person to fully participate in this meeting, contact the City Clerk at 899-6707 no fewer than two business days prior to the meeting to allow reasonable arrangements. Agendas are posted at:
http://www.ci.seaside.ca.us/129/City-Council-Committee-Agendas
Agenda-related writings or documents provided during public meetings are available for public inspection during the meeting or from the office of the City Clerk. This agenda is posted in compliance with California Government Code Section 54954.2(a) or Section 54956.

FINAL MINUTES

CITY OF SEASIDE
PLANNING COMMISSION

REGULAR MEETING
COUNCIL CHAMBER
Wednesday, July 9, 2025
6:00 PM

1. CALL TO ORDER

Chair Silva called the meeting to order at 6:00 p.m.

2. ROLL CALL – PLANNING COMMISSION

PRESENT: EVANS, SILVA, DODSON, ALCARAZ, OWENS,
ABSENT: HUYNH, LAMICA

3. REVIEW OF AGENDA

No Changes.

4. PUBLIC COMMENT

None.

5. APPROVAL OF MINUTES

Approve Minutes from June 25, 2025

On motion by Commissioner Owens, and second by Dodson, and carried by the following vote, the Planning Commission moved to approve the Minutes from June 25 , 2025

RESULTS: 5, 0, 2, 0
AYES: Dodson, Silva, Alcaraz, Owens, Evans
NOYES: None
ABSENT: Huynh, LaMica
ABSTAIN: None

ACTION: APPROVED & ADOPTED RESOLUTION

6. BUSINESS ITEMS

A. USE PERMIT APPLICATION NO. UP-2025-004. CHRISTINE WINGE OF MEALS ON WHEELS OF MONTEREY PENINSULA, APPLICANT, AND THE

TAYLOR AND KERI LOESCH REVOCABLE TRUST, PROPERTY OWNER, ARE REQUESTING USE PERMIT APPROVAL FOR THE FOLLOWING: A MEETING FACILITY FEATURING A RESTAURANT WITH COUNTER SERVICE AND CATERING, AND A REQUEST FOR REDUCTION TO REQUIRED PARKING AT 1020 AUTO CENTER PARKWAY (APN: 011-523-021) IN THE REGIONAL COMMERCIAL (CRG) ZONING DISTRICT. THE PROJECT IS CATEGORICALLY EXEMPT (CLASS 32) FROM THE CALIFORNIA ENVIRONMENTAL QUALITY ACT (CEQA) PURSUANT TO SECTION 15332 OF THE CEQA GUIDELINES.

Eric Azriel, Associate Planner, gave a presentation recommending approval of UP-2025-004, subject to the conditions of approval and project plans.

PUBLIC COMMENT:

Christine Winge, Mark Hansen, Architect Al, Paul Bruno, Esther Hodds, Stephanie Scoffield, David Foster

On motion by Commissioner Owens, and second by Alcaraz, and carried by the following vote, the Planning Commission moved to approve UP-2025-004 to the conditions of approval and project plans with amendment changes: strike second sentence of 10, strike 13, 14, 16 and Curb cut subject to Public Works assessment

RESULTS: 5, 0, 2, 0
AYES: Evans, Dodson, Silva, Alcaraz, Owens
NOYES: None
ABSENT: Huynh, LaMica
ABSTAIN: None
ACTION: APPROVED & ADOPTED RESOLUTION

7. REPORTS FROM COMMISSIONERS

Chair Silva responded to Commissioner Owen's comments regarding the seagull infestation at the vacant Seaside Market and Auto Center, stating that the situation is very serious. Eggs are being laid and abandoned, chicks are falling from nests-some being ran over. He emphasized the need to explore a long-term solution. Commissioner Alcaraz also noted that weekend events at Los Portales Mexican restaurant have been continuing into the early morning hours. Andy recommended contacting the Building Official and Code Enforcement to address the issue

8. REPORTS FROM STAFF

Andrew Myrick, Community Development and Planning Manager, gave a heads up that the Firearms Ordinance and Request for water for Meals on Wheels is going to Council on July 17, 2025

9. ADJOURNMENT

With no further business the meeting adjourned at 7:27 p.m.

On motion by Commissioner Owens, and second by Dodson, and carried by the following vote, the Planning Commission moved to adjourn

Respectfully submitted,

Andrew Myrick, Economic Development & Community Planning Manager	**William Silva, Chair**

CITY OF SEASIDE
STAFF REPORT

Item No.: 6.A.

TO: Planning Commission

BY: Eric Azriel, Associate Planner

DATE: September 24, 2025

SUBJECT: **USE PERMIT APPLICATION UP-2025-008. JAMES DILLON – JIM GISH INC., PROJECT APPLICANT, AND RYAN AND MEGAN BASSETT, PROPERTY OWNERS, REQUEST APPROVAL OF USE PERMIT APPLICATION UP-2025-008 FOR REDUCTION OF PARKING REQUIRED FOR ADDING 523 SQUARE FEET OF NEW FLOOR AREA TO THE EXISTING 918 SF SINGLE-FAMILY RESIDENCE AT 1372 MILITARY AVENUE (APN 011-036-010) IN THE RS-8 SINGLE-FAMILY RESIDENTIAL ZONING DISTRICT. THE PROJECT IS CATEGORICALLY EXEMPT (CLASS 1) FROM THE CALIFORNIA ENVIRONMENTAL QUALITY ACT (CEQA) PURSUANT TO SECTION 15301(E) OF THE CEQA GUIDELINES.**

RECOMMENDATION

Staff recommends the Commission receive the presentation, consider the facts, drafted findings, and public comments, and approve, approve with conditions, or deny the Use Permit application.

BACKGROUND

The project site consists of a 918 square foot (SF) single-family dwelling on a 6,600 SF lot. Nearby uses are entirely single-family dwellings and mostly single-story. The nearby dwellings on the same block face appear to have been built at a similar time with similar designs and site plans.

PROJECT DESCRIPTION

The project proposes creating two single-story additions to the existing 918 SF dwelling. The front addition would expand the house by 80 SF and occupy 8′ of the 30′ long driveway, reducing the total length of the driveway to 22'. The rear addition would add 443 SF to create a master bedroom, expand the kitchen, and move the dining room. The project plans are shown in Exhibit A to Attachment 1: Project Plans. Below, Table 1 shows the calculated areas of the project.

Table 1. Project areas

	Area
Lot size*	6,600 SF
Existing first floor*	918 SF
Proposed first-floor addition - front*	80 SF
Proposed first floor addition - rear*	443 SF
Shed 1 to remain	384 SF
Shed 3 (greenhouse) to remain	48 SF
Total proposed addition	523 SF
Total dwelling proposed area	1,441 SF
Total proposed floor area (including accessory structures)	1,873 Sf
Allowed floor area (FAR 0.45)	2,790 SF

* The areas in this table are calculated from the dimensions provided on the plans. In some cases, there was a discrepancy between the area tables on the plans and the calculated result; in such cases, the calculated results were used.

PARKING ANALYSIS

The project increases the single-family dwelling area from 918 SF to 1,441 SF. This increases the parking requirement from no additional parking spaces to two spaces, at least one covered per Seaside Municipal Code (SMC) 17.34.040 Table 3-8.

Driveway parking

The existing driveway is 30′ long, which does not provide any official parking spaces because SMC 17.30.100.D.2 does not allow required parking spaces in the front 15′ setback and SMC 17.34.110 requires parking spaces to be at least 19′ long. Subtracting the 15' front setback from the 30' long driveway yields less than the 19' required for a parking space. However, the existing driveway does as a practical matter provide one

temporary overnight parking space in accordance with SMC 17.30.100.D.2 and SMC 17.34.110. The conversion of 8' of the driveway to the primary structure leaves 22' of driveway, which still allows one temporary overnight parking space.

Constructing required parking
The SMC requires the construction of one covered parking space and one uncovered parking space as a part of the proposed addition. The western side of the dwelling sits 23' from the property line. Geometrically, this provides sufficient space for several possible configurations to provide this parking. For example, the applicant could provide two parking spaces in tandem, one covered, extending at least 53' from the front property line (15' setback plus 19' parking space plus 19' parking space); alternatively, the applicant could provide one carport/garage extending to at least 39' from the front property line (20' driveway requirement per SMC 17.34.120.D.1 plus 19' parking space) plus an adjacent uncovered parking space. A two-car wide covered parking structure would be unable to fit within the 23' available width because of the required 5' side setback and 10' width of each parking space. The property has no access to an alley, preventing parking access from the rear of the property.

To add either version of the two official parking spaces, the western side of the property would need: a new curb cut, demolition of the existing ~30" retaining wall, addition of fill, demolition of the existing fence, demolition of an existing 192 SF planter, and demolition of the existing 48 SF greenhouse. The existing driveway with its one unofficial parking space and curb cut would also need to be removed because SMC 17.34.120.A.1 only allows one driveway for a single-family residential lot with 60' frontage.

Reducing required parking
This item is being brought to the Planning Commission without a recommendation. This is because the ultimate decision will rest on a subjective determination as to whether or not requiring the additional parking would be "unreasonable."

In order to approve the Use Permit to reduce the number of parking spaces, the Planning Commission would need to make the following finding pursuant to SMC 17.34.110:

A structure with nonconforming parking is proposed for rehabilitation and the existing structure's location, underlying parcel size or topography, or public safety concerns render the applicable parking requirement unreasonable.

As noted, in order to make the finding, at least one of the three items mentioned (location, topography, or public safety) must be "unreasonable." Staff's analysis indicates that there is nothing regarding the existing structure's placement (there is a 23-foot space on the side of the house that could accommodate the dwelling) or public safety (the property is on a standard residential street and there is no potential traffic conflicts beyond that which would normally be expected). There is, however, a 30"

drop from the sidewalk onto the property from the sidewalk (although the property levels out after that). Installation of a driveway over this is doable - however whether requiring this is "unreasonable" is unclear.

Two versions of finding number 2 (2A and 2B) are provided below. 2A has been prepared to support a determination to approve the Use Permit; 2B provides evidence to support a denial of the Use Permit. It is requested that in approving the Resolution the Planning Commission specify whether it is to approve or deny the project.

Supplemental Information
The applicant provided a written narrative of their request, provided as Attachment 4, and signatures from five nearby neighbors expressing support, provided as Attachment 5.

FINDINGS

1. The project is Categorically Exempt, Class 1, from the California Environmental Quality Act (CEQA) pursuant to Section 15301(E) of the CEQA Guidelines:
Evidence: The proposed residential addition of 523 SF to the existing 918 SF single-family dwelling is less than 10,000 SF, public services and facilities are available to allow the maximum development permissible in the General Plan, and the project is not located in an environmentally sensitive area.

2A. A structure with nonconforming parking is proposed for rehabilitation and the existing structure's location, underlying parcel size or topography, or public safety concerns render the applicable parking requirement unreasonable.
Evidence: The increase from 918 SF to 1,441 SF requires two parking spaces, at least one of them covered. The existing site design provides no official parking spaces. To add two official spaces, the western side of the property would need a new curb cut, demolition of the existing retaining wall, addition of more than 30" of fill, demolition of the existing fence, demolition of an existing 192 SF planter, and demolition of the existing 48 SF greenhouse. The two spaces could either be accomplished by paving almost the entirety of the western side and building a one-car carport or garage, or by extending the parking spaces deeper than the existing house, taking up the majority of the yard. If a new driveway would be created, then the existing driveway with its one unofficial parking space would need to be removed. Therefore, the parking requirement is unreasonable.

2B. A structure with nonconforming parking is proposed for rehabilitation and the existing structure's location, underlying parcel size or topography, or public safety concerns render the applicable parking requirement unreasonable.

Evidence: The increase from 918 SF to 1,441 SF requires two parking spaces, at least one of them covered. The existing site design provides no official parking spaces. The site retains sufficient space to establish a new curb cut, driveway, and covered parking on the west side of the property. Provision of the two parking stalls is not hindered by the existing structure's location, as two official parking spaces can be established by construction of tandem covered parking or by constructing one covered space and providing one uncovered parking space adjacent to it. Although there are some topographical challenges, adjacent properties have constructed driveways over similar conditions. Providing the parking spaces would raise no public safety concerns. Therefore, the parking requirement is reasonable, and the finding cannot be made.

3. The proposed use is allowed within the applicable zone and complies with all other applicable provisions of this Zoning Ordinance and the Municipal Code.

Evidence: Single family residences are permitted in the RS-8 Single Family Residential zoning district. The proposed addition complies with all applicable provisions of this Zoning Ordinance and Municipal Code.

4. The proposed use is consistent with the General Plan and any applicable specific plan.

Evidence: The General Plan classifies this district as Neighborhood Low (NL); single-family residential is a permitted use in Neighborhood Low districts. There is no Specific Plan applicable to this area.

5. The design, location, size, and operating characteristics of the proposed activity are compatible with the existing and planned future land uses in the vicinity.

Evidence: The proposed addition to the single-family dwelling raises the Floor Area Ratio to 0.28 of the 6,600 SF lot, which remains well below the 0.45 Floor Area Ratio limit for the RS-8 Single-family Residential zoning district. Nearby houses on the block show a similar construction with additions. Adding floor area to this 918 SF house will bring it into more coherence with its neighbors.

6. The site is physically suitable for the type, density and intensity of use being proposed, including access, utilities, and the absence of physical constraints.

Evidence: One single-family dwelling at 0.28 Floor Area Ratio is suitable development for the site in all respects.

7. Granting the permit would not be detrimental to the public interest, health, safety, convenience, or welfare, or materially injurious to persons, property, or improvements in the vicinity and zone district in which the property is located.

Evidence: Approving the permit would allow the addition of 523 SF to an existing 918 SF. A single-family residential dwelling in an area zoned for single-family residences will

not create detrimental effects.

ATTACHMENTS

1. Attachment 1: Draft Resolution
2. Exhibit A to Attachment 1: Project Plans
3. Attachment 2: Supplemental Site Plan
4. Attachment 3: Location Map
5. Attachment 4: Owner's Narrative
6. Attachment 5: Neighbor Signatures
7. Attachment 6: Site Photographs

PLANNING COMMISSION
RESOLUTION NO. 25-XX

A RESOLUTION OF THE PLANNING COMMISSION OF THE CITY OF SEASIDE, STATE OF CALIFORNIA, [APPROVING/DISAPPROVING] APPLICATION NO. UP-2025-008 FOR REDUCTION OF PARKING REQUIRED FOR ADDING 523 SQUARE FEET OF NEW FLOOR AREA TO THE EXISTING 918 SF SINGLE-FAMILY RESIDENCE AT 1372 MILITARY AVENUE (APN 011-036-010) IN THE RS-8 SINGLE-FAMILY RESIDENTIAL ZONING DISTRICT.

WHEREAS, Ryan and Megan Bassett, Property Owners, and James Dillon – Jim Gish Inc., Applicant, applied for Use Permit No. UP-2025-008; and

WHEREAS, the proposed project requires approval by the Planning Commission, and it is the responsibility of the Planning Commission to consider and weigh the merits of the application and public input in relation to the policies, standards and intent of the Seaside General Plan and Seaside Municipal Code; and

WHEREAS, the Planning Commission considered oral comments and written information concerning the Use Permit application No. UP-2025-008 at a duly noticed public hearing that the Planning Commission held on September 24, 2025.

NOW, THEREFORE, BE IT RESOLVED, that the Planning Commission adopts the following finding:

1. The project is Categorically Exempt, Class 1, from the California Environmental Quality Act (CEQA) pursuant to Section 15301(E) of the CEQA Guidelines:
Evidence: The proposed residential addition of 523 SF to the existing 918 SF single-family dwelling is less than 10,000 SF, public services and facilities are available to allow the maximum development permissible in the General Plan, and the project is not located in an environmentally sensitive area.

BE IT FURTHER RESOLVED, that the Planning Commission adopts the following findings for Use Permit No. UP-2025-008:

2A. A structure with nonconforming parking is proposed for rehabilitation and the existing structure's location, underlying parcel size or topography, or public safety concerns render the applicable parking requirement unreasonable.
Evidence: The increase from 918 SF to 1,441 SF requires two parking spaces, at least one of them covered. The existing site design provides no official parking spaces. To add two official spaces, the western side of the property would need

a new curb cut, demolition of the existing retaining wall, addition of more than 30" of fill, demolition of the existing fence, demolition of an existing 192 SF planter, and demolition of the existing 48 SF greenhouse. The two spaces could either be accomplished by paving almost the entirety of the western side and building a one-car carport or garage, or by extending the parking spaces deeper than the existing house, taking up the majority of the yard. If a new driveway would be created, then the existing driveway with its one unofficial parking space would need to be removed. Therefore, the parking requirement is unreasonable.

2B. A structure with nonconforming parking is proposed for rehabilitation and the existing structure's location, underlying parcel size or topography, or public safety concerns render the applicable parking requirement unreasonable.
Evidence: The increase from 918 SF to 1,441 SF requires two parking spaces, at least one of them covered. The existing site design provides no official parking spaces. The site retains sufficient space to establish a new curb cut, driveway, and covered parking on the west side of the property. Provision of the two parking stalls is not hindered by the existing structure's location, as two official parking spaces can be established by construction of tandem covered parking or by constructing one covered space and providing one uncovered parking space adjacent to it. Although there are some topographical challenges, adjacent properties have constructed driveways over similar conditions. Providing the parking spaces would raise no public safety concerns. Therefore, the parking requirement is reasonable, and the finding cannot be made.

3. The proposed use is allowed within the applicable zone and complies with all other applicable provisions of this Zoning Ordinance and the Municipal Code.
Evidence: Single family residences are permitted in the RS-8 Single Family Residential zoning district. The proposed addition complies with all applicable provisions of this Zoning Ordinance and Municipal Code.

4. The proposed use is consistent with the General Plan and any applicable specific plan.
Evidence: The General Plan classifies this district as Neighborhood Low (NL); single-family residential is a permitted use in Neighborhood Low districts. There is no Specific Plan applicable to this area.

5. The design, location, size, and operating characteristics of the proposed activity are compatible with the existing and planned future land uses in the vicinity.
Evidence: The proposed addition to the single-family dwelling raises the Floor Area Ratio to 0.28 of the 6,600 SF lot, which remains well below the 0.45 Floor Area Ratio limit for the RS-8 Single-family Residential zoning district. Nearby

houses on the block show a similar construction with additions. Adding floor area to this 918 SF house will bring it into more coherence with its neighbors.

6. The site is physically suitable for the type, density and intensity of use being proposed, including access, utilities, and the absence of physical constraints.
Evidence: One single-family dwelling at 0.28 Floor Area Ratio is suitable development for the site in all respects.

7. Granting the permit would not be detrimental to the public interest, health, safety, convenience, or welfare, or materially injurious to persons, property, or improvements in the vicinity and zone district in which the property is located.
Evidence: Approving the permit would allow the addition of 523 SF to an existing 918 SF. A single-family residential dwelling in an area zoned for single-family residences will not create detrimental effects.

BE IT FURTHER RESOLVED, the Planning Commission [approves/disapproves] Use Permit No. UP-2025-008 subject to the following Conditions of Approval:

Planning:

1. Landscaped areas, including trees and other plantings, as well as paving, walls, and fences, shall be regularly maintained.

2. The Zoning Administrator has the authority to approve minor changes to the landscaping, lighting, and architectural finishes of this project, given changes are kept in a similar design style, the colors and materials are within the same design family (metal, wood, composite siding), and the juxtaposition of the materials and colors achieves a similar design balance and aesthetic.

Building:

3. Construction must comply with all requirements of the California Building Code, as amended by the City of Seaside and in effect at the time of Building Permit submittal.

Fire Department:

4. Construction must comply with all requirements of the California Fire Code, as amended by the City of Seaside and in effect at the time of Building Permit submittal.

Standard:

5. Except as modified by the conditions of approval, plans submitted for Building Permits must be in compliance with Exhibit A: Project Plans.

6. The applicant agrees as a condition and in consideration of the approval of this permit that it will defend, indemnify and hold harmless the City of Seaside or its agents, officers and employees from any claim, action or proceeding against the City or its agents, officers or employees to attack, set aside, void or annul this approval. The applicant will reimburse the City for any court costs and attorney's fees, which the City may be required by a court to pay as a result of such action. City may, at its sole discretion, participate in the defense of such action; but such participation shall not relieve applicant of his obligations under this condition. The City shall promptly notify the applicant of any such claim, action, or proceeding, and the City shall cooperate fully in the defense thereof.

7. The project shall comply with the requirements and the applicable ordinances of the Monterey Peninsula Water Management District (MPWMD).

8. The permit shall have no force or effect unless and until accepted, and the terms thereof agreed to, in writing, by the applicant and property owner prior to issuance of any Building Permit or establishment of any use authorized by the permit.

9. This approval shall become null and void unless a Building Permit application is submitted or authorized use is established within twelve (12) months of October 2, 2025 in accordance with Seaside Municipal Code Section 17.64.080.A. Time extensions may be granted in accordance with Seaside Municipal Code Section 17.64.080.B. This approval shall also become null and void if the implementing Building Permit application expires.

10. For purposes of assuring compliance, the applicant, agents, representatives or their assignees agree not to deny or impede access to the subject property by City employees in the performance of their duties.

PASSED AND ADOPTED at a regular meeting of the Planning Commission of the City of Seaside, State of California, on the 24th day of September 2025, by the following vote:

AYES:
NOES:
ABSENT:
ABSTAIN:

Will Silva, Chairperson

ATTEST:

_____

Planning Commission Secretary

Exhibits:

Exhibit A: Project Plans

USE PERMIT APPLICATION No. UP-2025-008
RESOLUTION No. <XX-XX>

This permit is hereby accepted upon the express terms and conditions hereof, and shall have no force or effect unless and until agreed to, in writing, by the applicant and property owner(s).
The undersigned hereby acknowledge the approved terms and conditions and agree to fully conform to, and comply with, said terms and conditions within the time frames approved by the City of Seaside Planning Commission.

_____ _____
Applicant's Signature Date

_____ _____
Property Owner's Signature Date

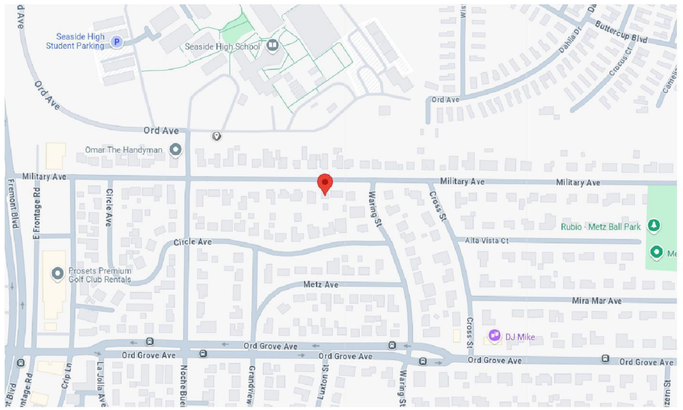

VICINITY MAP

RENOVATION
AT
RYAN AND MEGAN BASSETT

1372 MILITARY AVENUE, SEASIDE, CA 93955

TEL: 915-526-3606
APN: 011-036-010-000

PROJECT DATA:

ZONNING: RS-8	PROPOSED CUT/FILL: PROPOSED CUT: 0 CU. YDS. PROPOSED FILL: 0 CU. YDS.
CONSTRUCTION TYPE: TYPE V-B	TREE REMOVAL: NONE
OCCUPANCY GROUP: R-3	SPECIAL INSPECTION: N/A
SCOPE OF WORK: PROPOSED REMODEL AND ADDITION	FIRE SPRINKLERS: NOT REQUIRED
STORIES: EXISTING ONE STORY	DEFERRED SUBMITTALS: NONE
FIRE RET. ROOFING: CLASS "A" 1 HOUSE FIRE RATED SHINGLES	WATER & SEPTIC SYSTEM: EXISTING WATER EXISTING SEWER

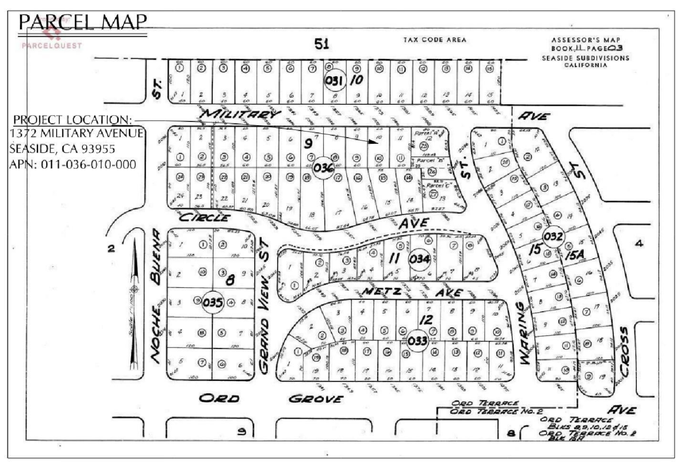

PARCEL MAP

EXISTING FRONT ELEVATION

AREA CALCULATION

FLOOR AREA RATIO	EXISTING		PROPOSED	
LOT SIZE	6,200	SQFT	6,200	SQFT
RESIDENCE COVERAGE	842	SQFT	842	SQFT
FRONT ADDITION			82	SQFT
REAR ADDITION			433	SQFT
SHED 1	384	SQFT	384	SQFT
SHED 2	144	SQFT		
SHED 3	48	SQFT	48	SQFT
SITE COVERAGE	1,418	SQFT	1,789	SQFT
PERCENT OF LOT	22.9%		28.9%	
ALLOWED MAX	45%			

SITE COVERAGE	EXISTING		PROPOSED	
LOT SIZE	6,200	SQFT	6,200	SQFT
RESIDENCE COVERAGE	842	SQFT	1,357	SQFT
SHEDS	576	SQFT	432	SQFT
HARDSCAPE	352	SQFT	386	SQFT
SITE COVERAGE	1,770	SQFT	2,175	SQFT
PERCENT OF LOT	28.5%		35.1%	
ALLOWED MAX	65%			

SHEET LIST

Sheet Number	Sheet Name
A0	SITE PLAN
A1	EXISTING - FLOOR PLANS
A2	EXISTING - EXTERIOR ELEVATION 01
A3	EXISTING - EXTERIOR ELEVATION 02
A4	DEMO - FLOOR PLAN
A5	PROPOSED - FLOOR PLAN
A6	PROPOSED - EXTERIOR ELEVATION 01
A7	PROPOSED - EXTERIOR ELEVATION 02
CS	COVER SHEET

CODE COMPLIANCE STATEMENT

PROJECT SHALL COMPLY WITH THE 2019 CALIFORNIA CODE OF REGULATIONS, TITLE 24 TO INCLUDE; CALIFORNIA RESIDENTIAL CODE (CRC), CALIFORNIA MECHANICAL CODE (CMC), CALIFORNIA PLUMBING CODE (CPC), CALIFORNIA ELECTRICAL CODE (CEC), CALIFORNIA ENERGY CODE (CEnC) AND CALIFORNIA GREEN CODE (CalGreen)

DESIGN NOTE

THESE DRAWINGS SHALL REMAIN THE PROPERTY OF BLACKWELL DESIGN CONSULTANTS LLC. NO PART SHALL BE USED FOR ANY PROJECT, OTHER THAN THE SPECIFIED PROJECT FOR WHICH THEY HAVE BEEN PREPARED, WITHOUT THE CONSENT OF BLACKWELL DESIGN CONSULTANTS LLC. CONTRACTORS AND/OR OWNER-BUILDER SHALL VERIFY AND BE RESPONSIBLE FOR ALL DIMENSIONS AND CONDITIONS ON THE JOB. BLACKWELL DESIGN CONSULTANTS LLC. MUST BE NOTIFIED OF ANY VARIATIONS FROM THE DIMENSIONS AND CONDITIONS SHOWN BY THESE DRAWINGS.

JIM GISH, INC.

JG DESIGN • BUILD

BASSETT

1372 Military Ave, Seaside, CA 93955, USA

Seal

REGISTERED PROFESSIONAL ENGINEER
JAMES E AUSTIN
4782
STRUCTURAL
STATE OF CALIFORNIA

3/28/2025

TO THE BEST OF MY KNOWLEDGE, THE BUILDING DESIGN PLANS AND SPECIFICATIONS COMPLY WITH FLORIDA BUILDING CODE

NOT FOR CONSTRUCTION

date	submission / revision	no.

COVER SHEET

scale:	1/4" = 1'-0"
drawn by:	Author
checked by:	Checker
date:	Issue Date
project number:	Project Number

CS

1 A0 SITE PLAN

SCALE: 1/8" = 1'-0"

1	EXISTING ELECTRICAL METER & SERVICE		
2	EXISTING GAS METER & SERVICE		
3	FRONT SETBACK	15'	
4	SIDE SETBACK	5'	
5	REAR SETBACK	15'	
6	EXISTING RESIDENCE COVERAGE		842 SQFT
7	NEW RESIDENCE COVERAGE	FRONT ADDITION	82 SQFT
8	NEW RESIDENCE COVERAGE	REAR ADDITION	433 SQFT
9	EXISTING SHED	SHED 1	384 SQFT
10	EXISTING SHED	SHED 2, TO BE REMOVED	144 SQFT
11	EXISTING GREEN HOUSE	SHED 3	48 SQFT
12	EXISTING RAISED PLANTER		170 SQFT
13	WALKWAY & STEPS	COCNRETE	84 SQFT
14	DRIVEWAY	COCNRETE	268 SQFT
15	NEW REAR STEPS	COCNRETE	34 SQFT

FLOOR AREA RATIO	EXISTING		PROPOSED	
LOT SIZE	6,200	SQFT	6,200	SQFT
RESIDENCE COVERAGE	842	SQFT	842	SQFT
FRONT ADDITION			82	SQFT
REAR ADDITION			433	SQFT
SHED 1	384	SQFT	384	SQFT
SHED 2	144	SQFT		
SHED 3	48	SQFT	48	SQFT
SITE COVERAGE	1,418	SQFT	1,789	SQFT
PERCENT OF LOT	22.9%		28.9%	
ALLOWED MAX	45%			

SITE COVERAGE	EXISTING		PROPOSED	
LOT SIZE	6,200	SQFT	6,200	SQFT
RESIDENCE COVERAGE	842	SQFT	1,357	SQFT
SHEDS	576	SQFT	432	SQFT
HARDSCAPE	352	SQFT	386	SQFT
SITE COVERAGE	1,770	SQFT	2,175	SQFT
PERCENT OF LOT	28.5%		35.1%	
ALLOWED MAX	65%			

LIVING AREA	EXISTING		PROPOSED	
LOT SIZE	6,200	SQFT	6,200	SQFT
LIVING AREA	842	SQFT	842	SQFT
FRONT ADDITION			82	SQFT
REAR ADDITION			433	SQFT
LIVING AREA	842	SQFT	1,357	SQFT

ADDED LIVING AREA	515	SQFT
TOTAL NEW LIVING AREA	1,357	SQFT

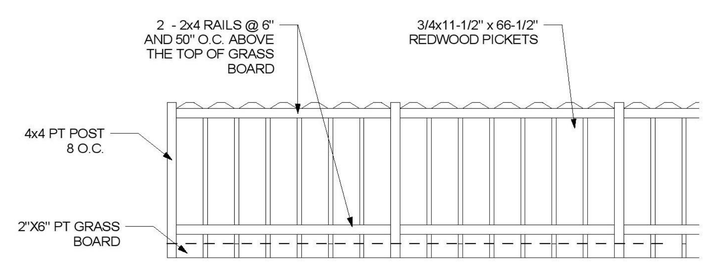

2 A0 FENCE DETAILS

JIM GISH, INC.

BASSETT

1372 Military Ave, Seaside, CA 93955, USA

Seal

REGISTERED PROFESSIONAL ENGINEER
JAMES E AUSTIN
4782
STRUCTURAL
STATE OF CALIFORNIA

3/28/2025

TO THE BEST OF MY KNOWLEDGE, THE BUILDING DESIGN PLANS AND SPECIFICATIONS COMPLY WITH FLORIDA BUILDING CODE

NOT FOR CONSTRUCTION

date	submission / revision	no.

SITE PLAN

scale:	As indicated
drawn by:	Author
checked by:	Checker
date:	Issue Date
project number:	Project Number

A0

COVERAGE CALCULATIONS	
EXISTING LIVING AREA	902 SF
EXISTING WORKSHOP	384 SF
OVERALL EXISTING SQFT:	1,286 SF

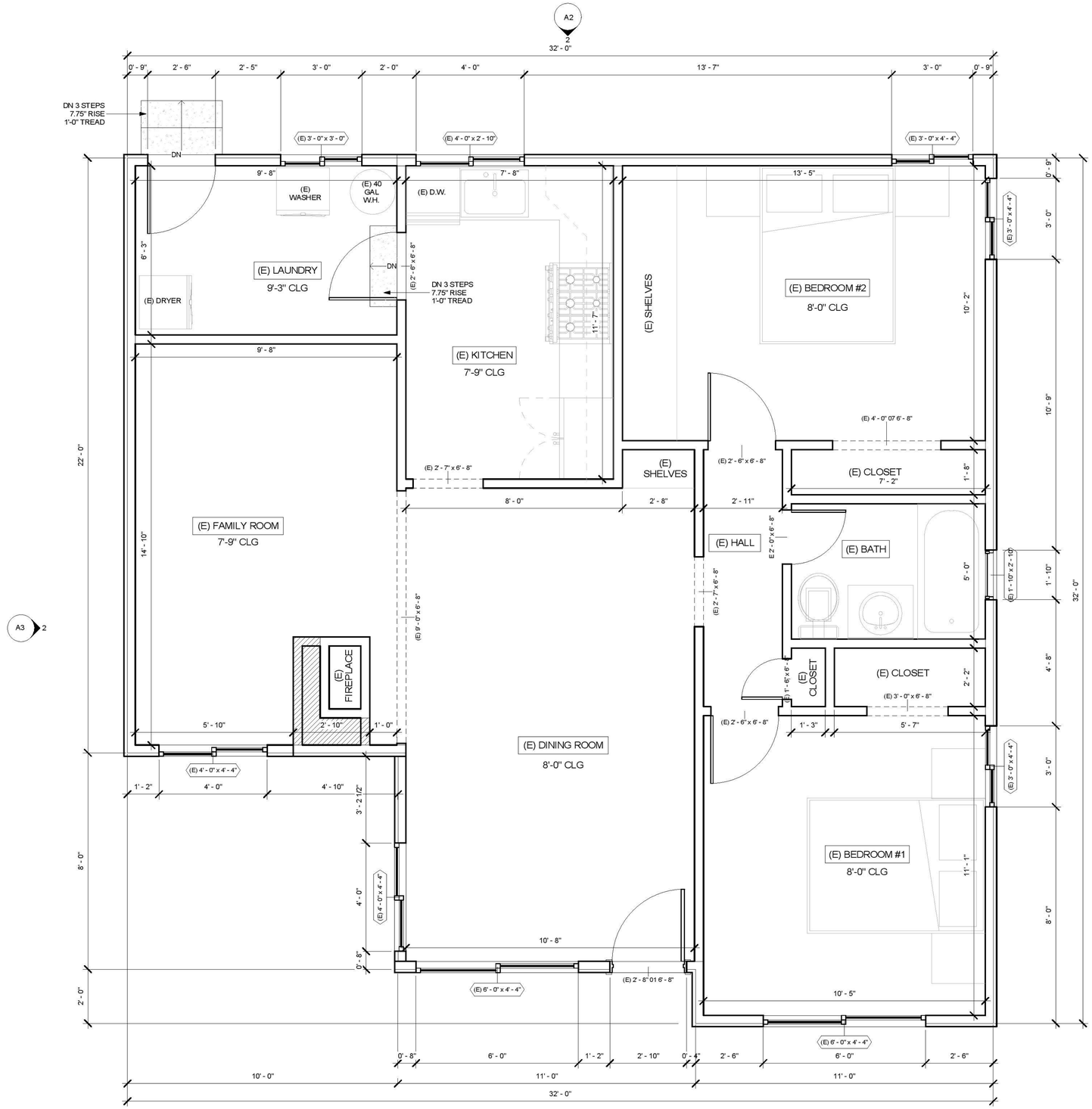

EXISTING FLOOR PLAN

SCALE: 1/2" = 1'-0"

JIM GISH, INC.

DESIGN • BUILD

BASSETT

1372 Military Ave, Seaside, CA 93955, USA

Seal

REGISTERED PROFESSIONAL ENGINEER
JAMES E AUSTIN
4782
STRUCTURAL
STATE OF CALIFORNIA

3/28/2025

TO THE BEST OF MY KNOWLEDGE, THE BUILDING DESIGN PLANS AND SPECIFICATIONS COMPLY WITH FLORIDA BUILDING CODE

NOT FOR CONSTRUCTION

date	submission / revision	no.

EXISTING - FLOOR PLANS

scale:	As indicated
drawn by:	Author
checked by:	Checker
date:	Issue Date
project number:	Project Number

A1

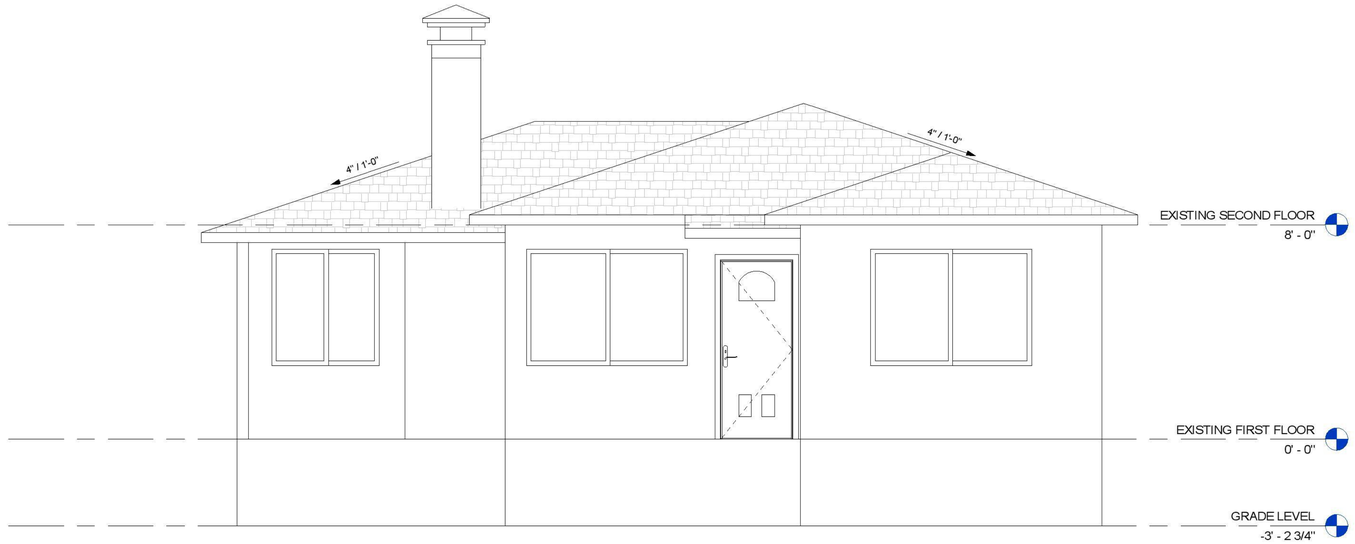

1
A2

EXISITING - FRONT ELEVATION

SCALE: 3/8" = 1'-0"

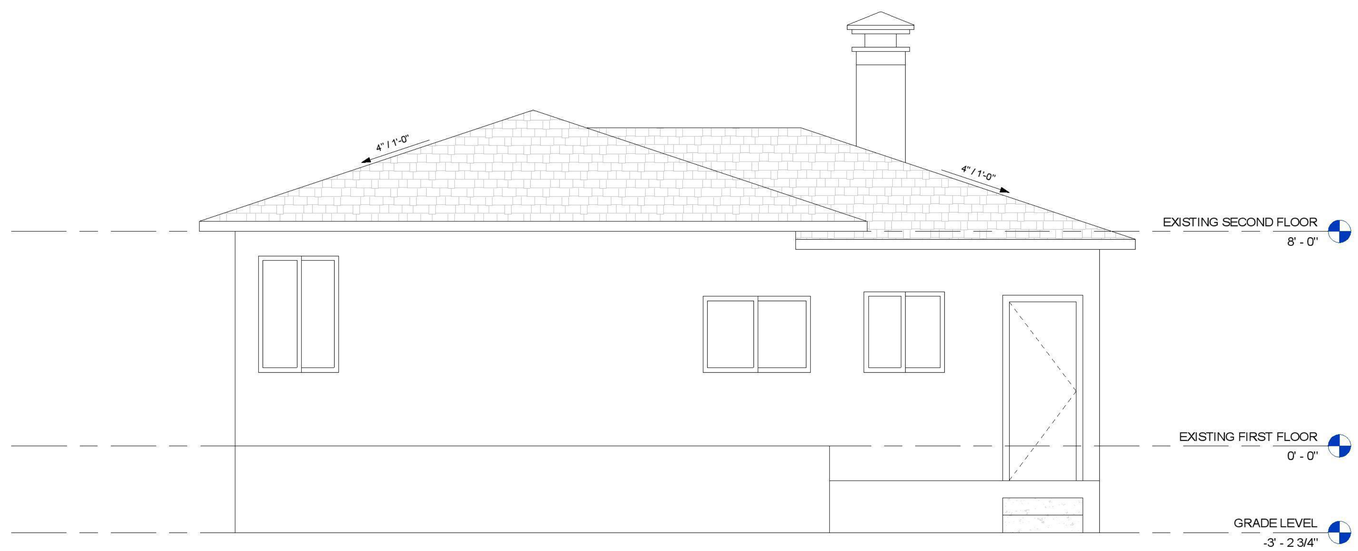

2
A2

EXISTING - REAR ELEVATION

SCALE: 3/8" = 1'-0"

JIM GISH, INC.

JG
DESIGN + BUILD

BASSETT

1372 Military Ave, Seaside, CA 93955, USA

Seal

REGISTERED PROFESSIONAL ENGINEER
JAMES E AUSTIN
4782
STRUCTURAL
STATE OF CALIFORNIA

3/28/2025

TO THE BEST OF MY KNOWLEDGE, THE BUILDING DESIGN PLANS AND SPECIFICATIONS COMPLY WITH FLORIDA BUILDING CODE

NOT FOR CONSTRUCTION

date	submission / revision	no.

EXISTING - EXTERIOR ELEVATION 01

scale:	3/8" = 1'-0"
drawn by:	Author
checked by:	Checker
date:	Issue Date
project number:	Project Number

A2

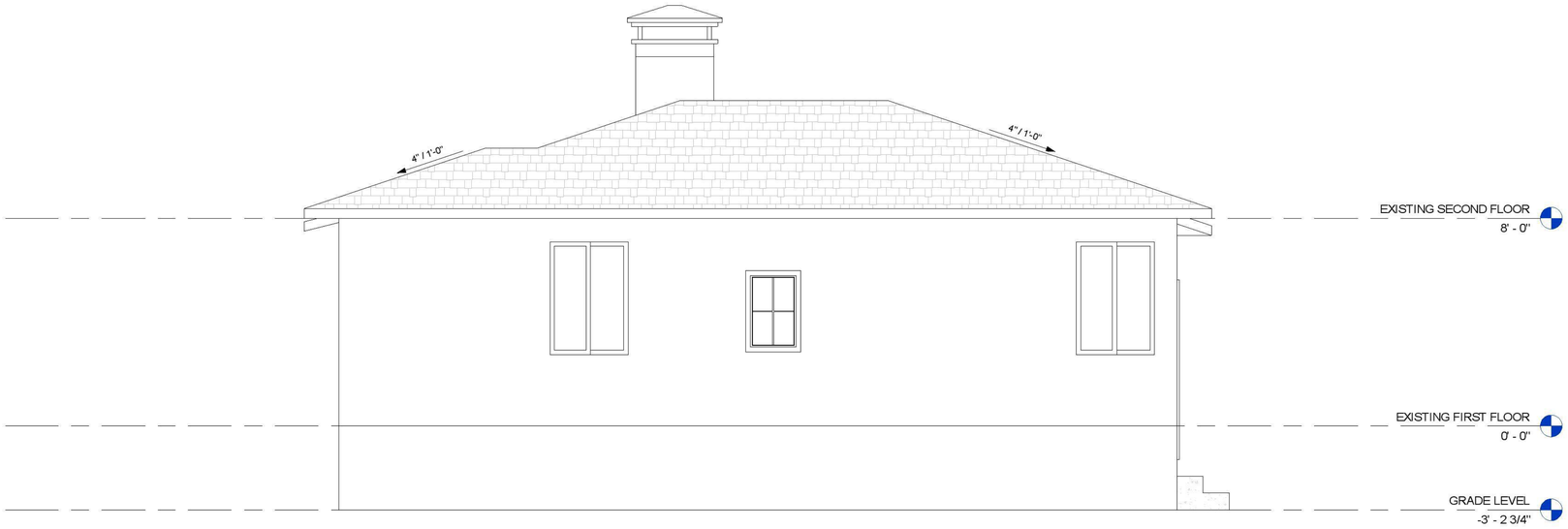

1
A3

EXISTING - RIGHT ELEVATION

SCALE: 3/8" = 1'-0"

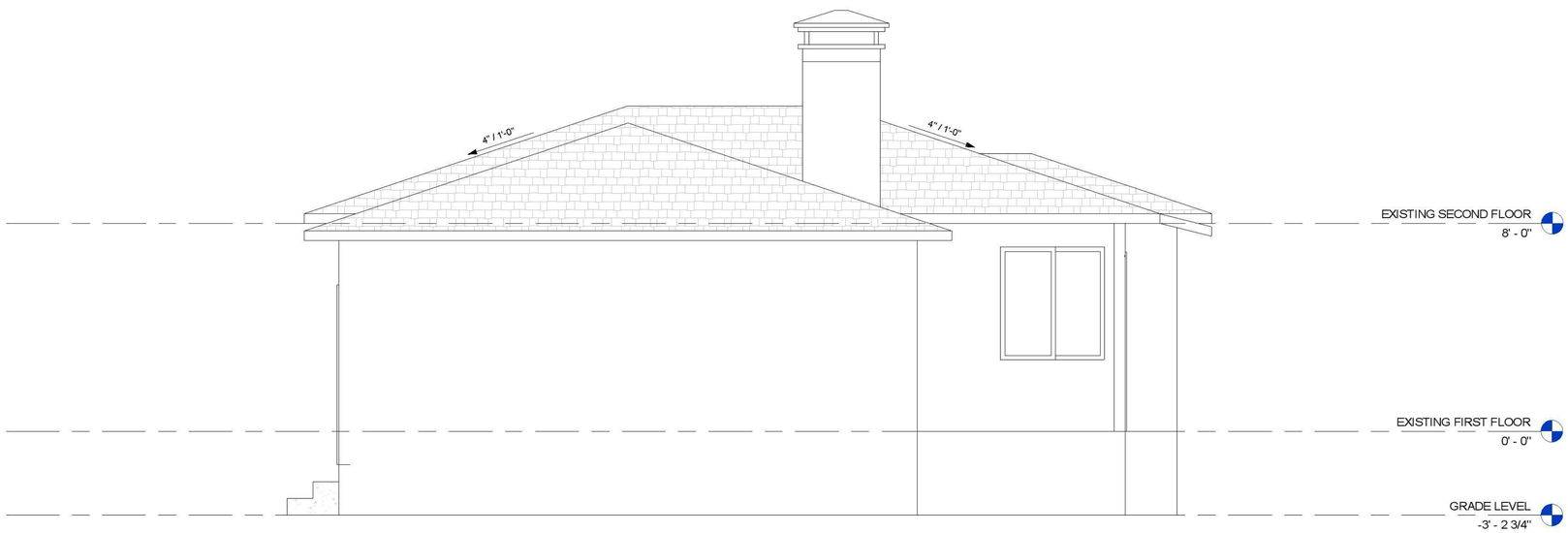

2
A3

EXISTING - LEFT ELEVATION

SCALE: 3/8" = 1'-0"

JIM GISH, INC.

JG
DESIGN + BUILD

BASSETT

1372 Military Ave, Seaside, CA 93955, USA

Seal

REGISTERED PROFESSIONAL ENGINEER
JAMES E AUSTIN
4782
STRUCTURAL
STATE OF CALIFORNIA

3/28/2025

TO THE BEST OF MY KNOWLEDGE, THE BUILDING DESIGN PLANS AND SPECIFICATIONS COMPLY WITH FLORIDA BUILDING CODE

NOT FOR CONSTRUCTION

date	submission / revision	no.

EXISTING - EXTERIOR ELEVATION 02

scale:	3/8" = 1'-0"
drawn by:	Author
checked by:	Checker
date:	Issue Date
project number:	Project Number

A3

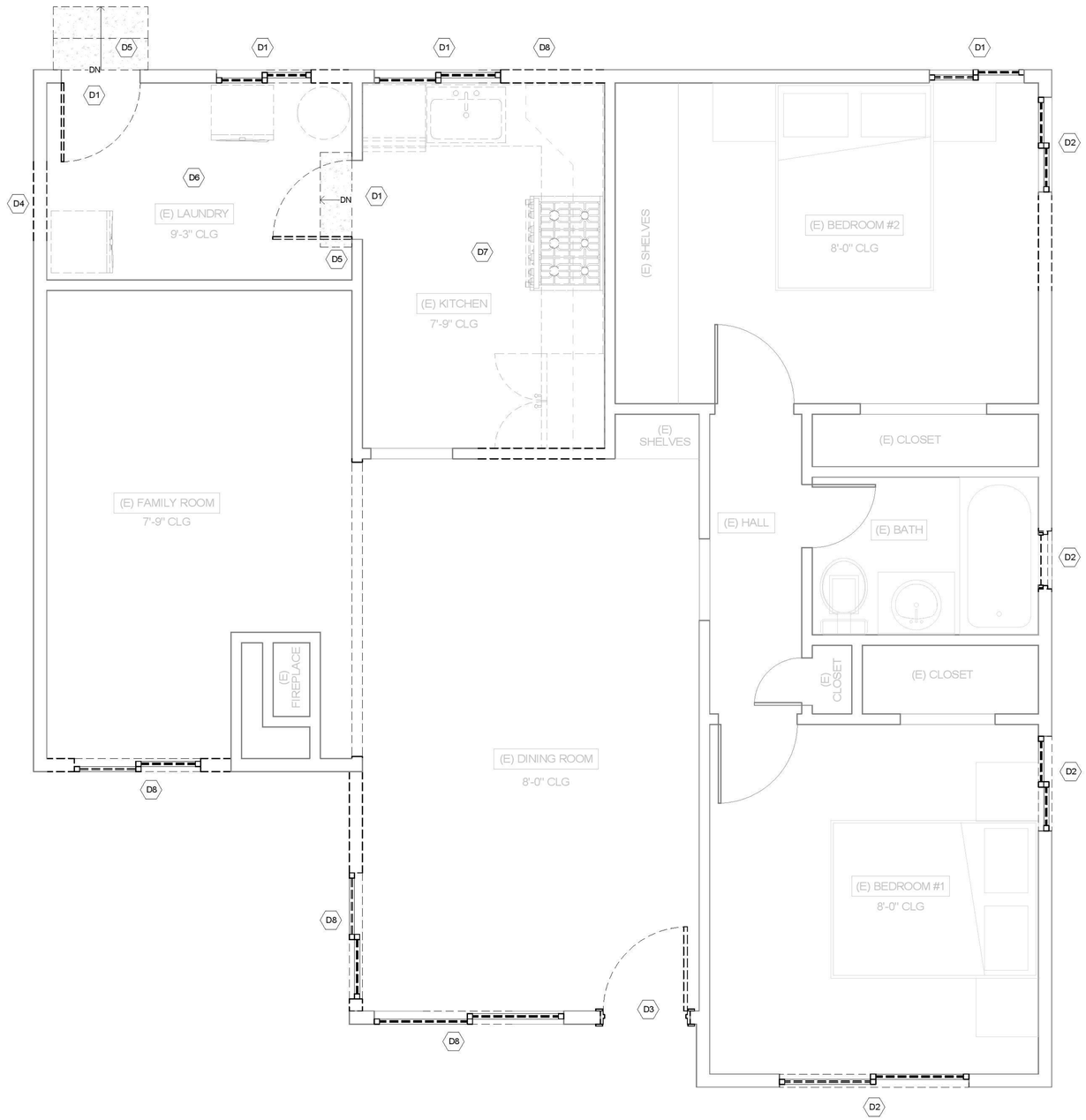

2
A4

DEMO FLOOR PLAN

SCALE: 1/2" = 1'-0"

DEMOLITION - GENERAL NOTES:

1. VERIFY ALL DIMENSIONS AND ELEVATIONS BEFORE STARTING DEMOLITION WORK
2. PROVIDE TEMPORARY BRACING AND SHORING OF JOISTS AND BEAMS WHEN DEMOLISHING EXISTING WALLS
3. ALL TERMITE AFFECTED AREAS AND/OR STRUCTURAL MEMBERS SHALL BE REPLACED WITH EQUAL OR BETTER STRUCTURAL NEW MEMBERS
4. ALL DEMOLISHING WORK SHALL BE PERFORMED IN ACCORDANCE WITH LOCAL LAWS AND REGULATIONS FOR SAFETY MEASURES AND CONSTRUCTION METHODS
5. THE CONTRACTORS SHALL BE RESPONSIBLE FOR PROPER DISPOSAL OF ALL DEMOLISHED MATERIAL AND EQUIPMENT
6. ANY DEMOLITION THAT IS FOUND NECESSARY DURING THIS WORK AND THAT IS NOT NOTED IN THIS DRAWING SHALL BE INFORMED TO THE ENGINEER.

KEYNOTES - DEMO PLAN

D1	DEMO EXISTING DOOR AND/OR WINDOW INCLUDING FRAME AND HARDWARE. PREPARE FOR NEW WORK.
D2	DEMO EXISTING WINDOW AND REPLACE IT WITH NEW WINDOWS, SEE SIZE AND TYPE IN PROPOSED PLAN.
D3	REMOVE EXISTING ENTRY DOOR AND RELOCATE IT. CHANGE ALIGNMENT OF STAIR COMING DOWN WITH THE SIDE WALK. SEE PROPOSED PLAN FOR NEW ENTRY LOCATION.
D4	DEMO PART OF THE WALL AND PREPARE FOR THE NEW WINDOW FOR NEW BATHROOM. MATCH EXTERIOR FINISH WITH EXISTING.
D5	REMOVE STEPS AND MATCH FLOOR FINISH ELEVATION WITH THE LIVING AREA.
D6	DEMO/RELOCATE WASHER, DRYER AND WATER HEATER. PRPARE FOR THE NEW BATHROOM LAYOUT. COORDINATE WITH MEP FOR REMOVAL/CHANGES IN ANY MECHANICAL, ELECTRICAL AND PLUMBING ITEMS.
D7	DEMO EXISITNG KITCHEN COUNTERTOP AND ALL APPLIANCES. PRAPRE FOR THE NEW LAUNDRY AND PANTRY AREA. SEE PROPOSED PLAN. COORDINATE WITH MEP FOR REMOVAL/CHANGES IN ANY MECHANICAL, ELECTRICAL AND PLUMBING ITEMS.
D8	DEMO EXTERIOR WALL INCLUDING WINDOW/DOOR TO ENLARGE FAMILY ROOM. SEE PROPOSED PLAN FOR NEW LAYOUT.

JIM GISH, INC.

JG DESIGN + BUILD

BASSETT

1372 Military Ave, Seaside, CA 93955, USA

Seal

REGISTERED PROFESSIONAL ENGINEER
JAMES E AUSTIN
4782
STRUCTURAL
STATE OF CALIFORNIA

3/28/2025

TO THE BEST OF MY KNOWLEDGE, THE BUILDING DESIGN PLANS AND SPECIFICATIONS COMPLY WITH FLORIDA BUILDING CODE

NOT FOR CONSTRUCTION

date	submission / revision	no.

DEMO - FLOOR PLAN

scale:	As indicated
drawn by:	Author
checked by:	Checker
date:	Issue Date
project number:	Project Number

A4

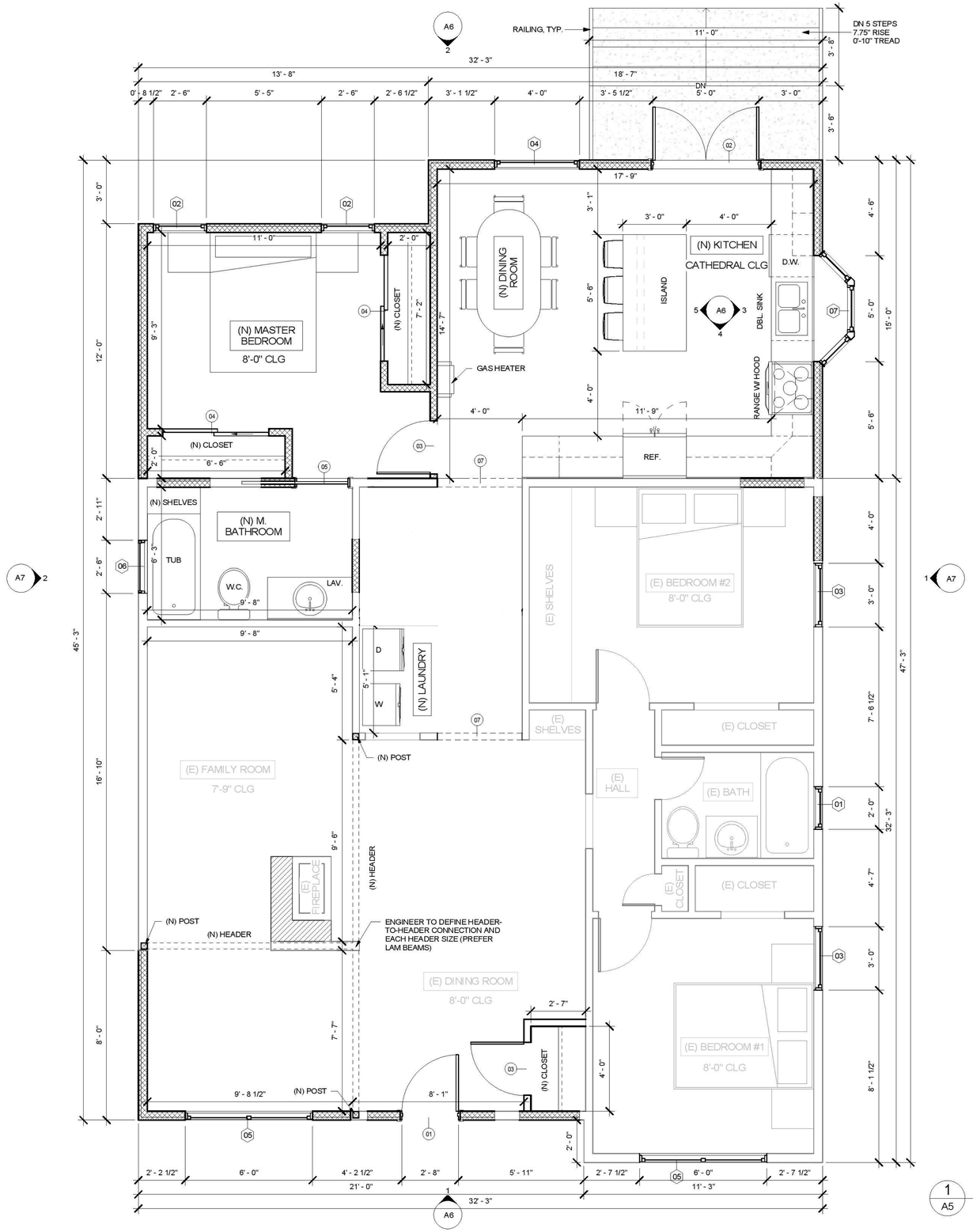

1 A5 PROPOSED FLOOR PLAN

SCALE: 3/8" = 1'-0"

CONSTRUCTION - GENERAL NOTES:

1. EXISTING ELEMENTS TO REMAIN REPRESENTED WITH SOLID LINES
2. ELEMENTS TO BE REMOVED REPRESENTED WITH DASHED LINES
3. ALL NEW WALLS REPRESENTED WITH CROSS HATCHING
4. GC TO PROVIDE TEMPORARY SUPPORT FOR EXISTING STRUCTURE TO REMAIN DURING DEMOLITION. REF TO STRUCTURAL NOTES
5. ALL CONCRETE WALLS SHALL BE FORMED WITH SOUND MATERIAL PROPERLY JOINED, BRACED, SPACED AND OTHERWISE SUPPORTED TO ENSURE TIGHTNESS AND RIGIDITY. PROPER FORMS SHALL BE PROVIDED FOR ALL OPENINGS IN FOUNDATION WALLS, INCLUDING BOXES OR SLEEVES FOR ALL PIPES ENTERING OR LEAVING.
6. NEW PLUMBING TO TIE INTO EXISTING STACK VENT AND WASTE LINE. PROVIDE EXHAUST AS REQUIRED.
7. VERIFY EXISTING ELECTRICAL PANEL CAPACITY, UPGRADE FROM EXISTING SERVICE IF NEEDED ADD ELECTRICAL SUB-PANEL TO ADU/SECOND FLOOR AREA.
8. LIGHT FIXTURE LOCATIONS, SWITCHES AND ELECTRICAL RECEPTACLES TO BE VERIFIED WITH OWNERS
9. COORDINATE WITH DESIGNER AND OWNERS IF FOLLOWING REVIEW OF EXISTING STRUCTURE AND/OR PROPOSED FRAMING WILL NOT BE ADEQUATE
10. COORDINATE ALL HEAD HEIGHTS OF WINDOWS & DOORS WITH EXISTING HEAD HEIGHTS

NEW DOOR SCHEDULE

Type Mark	Size	Description	Count
01	2' - 8" x 6' - 8"	Entry French Door, Exterior (Relocated existing entry door)	1
02	5' - 0" x 6' - 8"	Double French Door, Exterior	1
03	2' - 6" x 6' - 8"	Single Swing Door, Interior	2
04	5' - 0" x 6' - 8"	Sliding Door	2
05	2' - 6" x 6' - 8"	Single Pocket Door	1
06	5' - 0" x 6' - 9"	Double Bi-Fold Door, Interior	1
07	4' - 0" x 6' - 8"	Door Opening	2

Grand total: 10

NEW WINDOW SCHEDULE

Type Mark	Size	Description	Rough Openings	Count
01	2' - 0" x 2' - 10"	Single Hung Window	2' - 0 1/2" x 2' - 10 1/2"	1
02	2' - 6" x 3' - 6"	Single Hung Window	2' - 6 1/2" x 3' - 6 1/2"	2
03	3' - 0" x 4' - 4"	Single Hung Window	3' - 0 1/2" x 4' - 4 1/2"	2
04	4' - 0" x 4' - 6"	Single Hung Window	4' - 0 1/2" x 4' - 6 1/2"	1
05	6' - 0" x 4' - 4"	Single Hung Double Window	6' - 0 1/2" x 4' - 4 1/2"	2
06	2' - 6" x 1' - 4"	Fixed Window	2' - 6 1/2" x 1' - 4 1/2"	1
07	5' - 0" x 4' - 0"	Bay Window	5' - 0 1/2" x 4' - 0 1/2"	1

Grand total: 10

FLOOR AREA RATIO	EXISTING		PROPOSED	
LOT SIZE	6,200	SQFT	6,200	SQFT
RESIDENCE COVERAGE	842	SQFT	842	SQFT
FRONT ADDITION			82	SQFT
REAR ADDITION			433	SQFT
SHED 1	384	SQFT	384	SQFT
SHED 2	144	SQFT		
SHED 3	48	SQFT	48	SQFT
SITE COVERAGE	1,418	SQFT	1,789	SQFT
PERCENT OF LOT	22.9%		28.9%	
ALLOWED MAX	45%			

SITE COVERAGE	EXISTING		PROPOSED	
LOT SIZE	6,200	SQFT	6,200	SQFT
RESIDENCE COVERAGE	842	SQFT	1,357	SQFT
SHEDS	576	SQFT	432	SQFT
HARDSCAPE	352	SQFT	386	SQFT
SITE COVERAGE	1,770	SQFT	2,175	SQFT
PERCENT OF LOT	28.5%		35.1%	
ALLOWED MAX	65%			

JIM GISH, INC.

JG DESIGN • BUILD

BASSETT

1372 Military Ave, Seaside, CA 93955, USA

Seal

REGISTERED PROFESSIONAL ENGINEER JAMES E AUSTIN 4782 STRUCTURAL STATE OF CALIFORNIA

3/28/2025

TO THE BEST OF MY KNOWLEDGE, THE BUILDING DESIGN PLANS AND SPECIFICATIONS COMPLY WITH FLORIDA BUILDING CODE

NOT FOR CONSTRUCTION

date	submission / revision	no.

PROPOSED - FLOOR PLAN

scale:	As indicated
drawn by:	Author
checked by:	Checker
date:	Issue Date
project number:	Project Number

A5

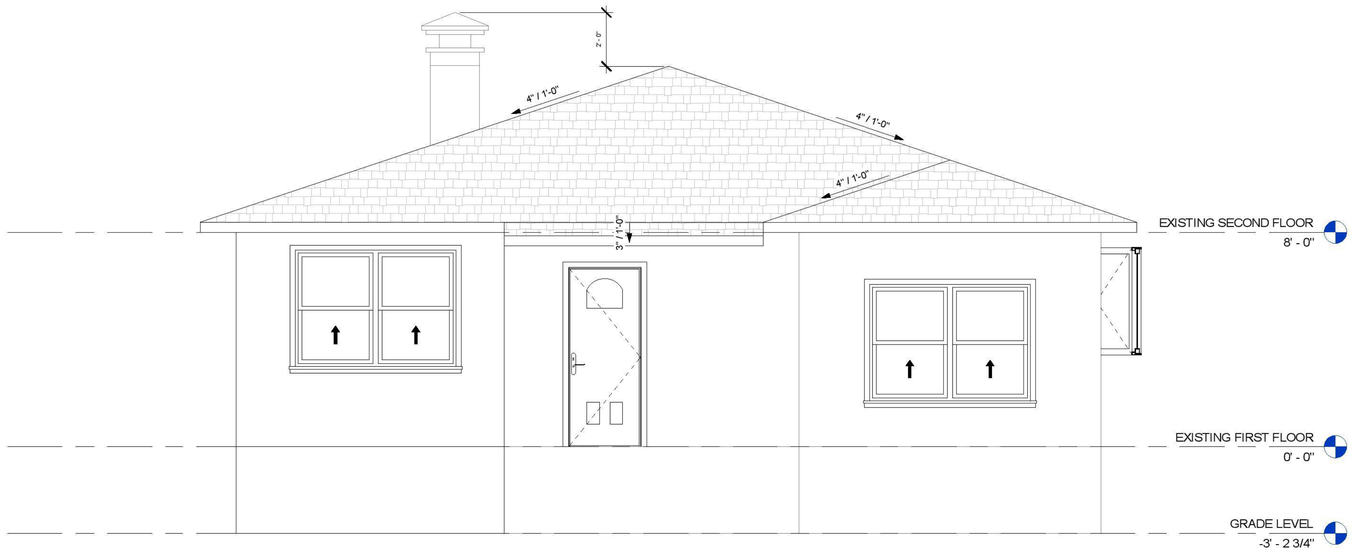

1 / A6 PROPOSED - FRONT ELEVATION

SCALE: 3/8" = 1'-0"

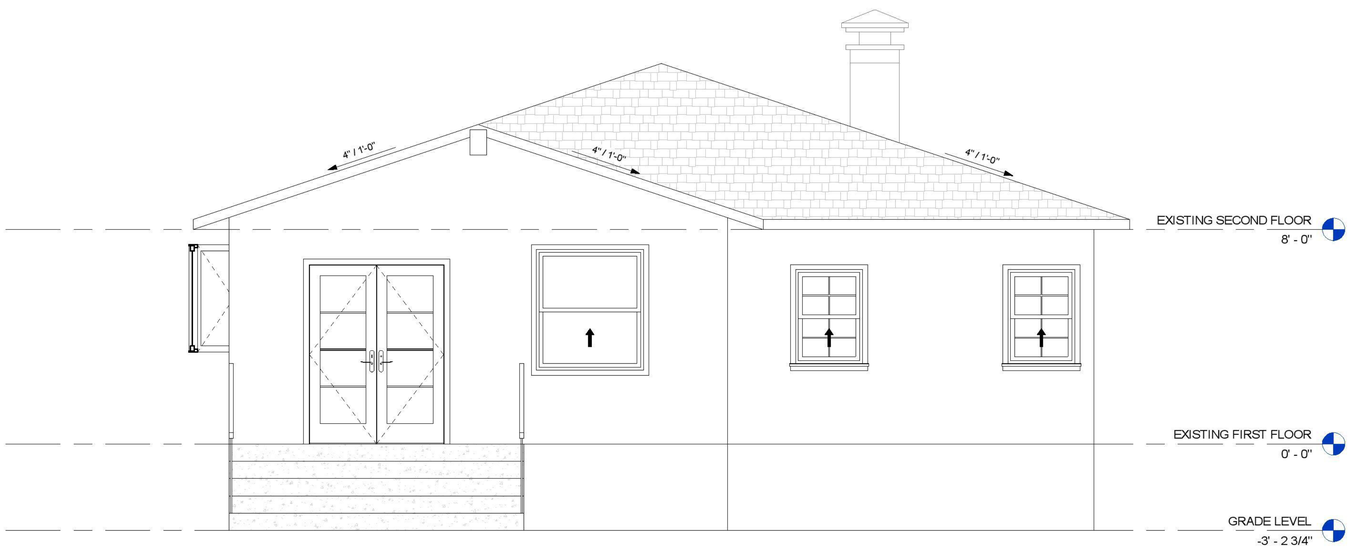

2 / A6 PROPOSED - REAR ELEVATION

SCALE: 3/8" = 1'-0"

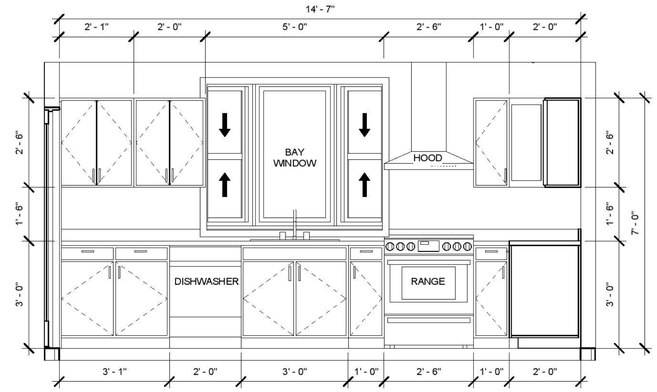

3 / A6 KITCHEN ELEVATION - 01

SCALE: 1/2" = 1'-0"

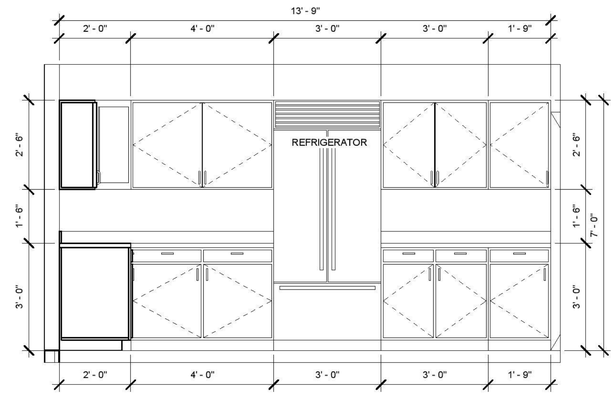

4 / A6 KITCHEN ELEVATION - 02

SCALE: 1/2" = 1'-0"

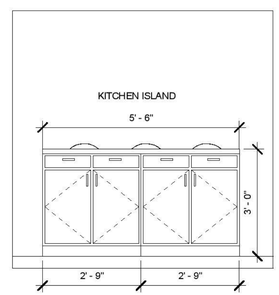

5 / A6 KITCHEN ELEVATION - 03

SCALE: 1/2" = 1'-0"

JIM GISH, INC.

JG DESIGN • BUILD

BASSETT

1372 Military Ave, Seaside, CA 93955, USA

Seal

3/28/2025

TO THE BEST OF MY KNOWLEDGE, THE BUILDING DESIGN PLANS AND SPECIFICATIONS COMPLY WITH FLORIDA BUILDING CODE

NOT FOR CONSTRUCTION

date	submission / revision	no.

PROPOSED - EXTERIOR ELEVATION 01

scale:	As indicated
drawn by:	Author
checked by:	Checker
date:	Issue Date
project number:	Project Number

A6

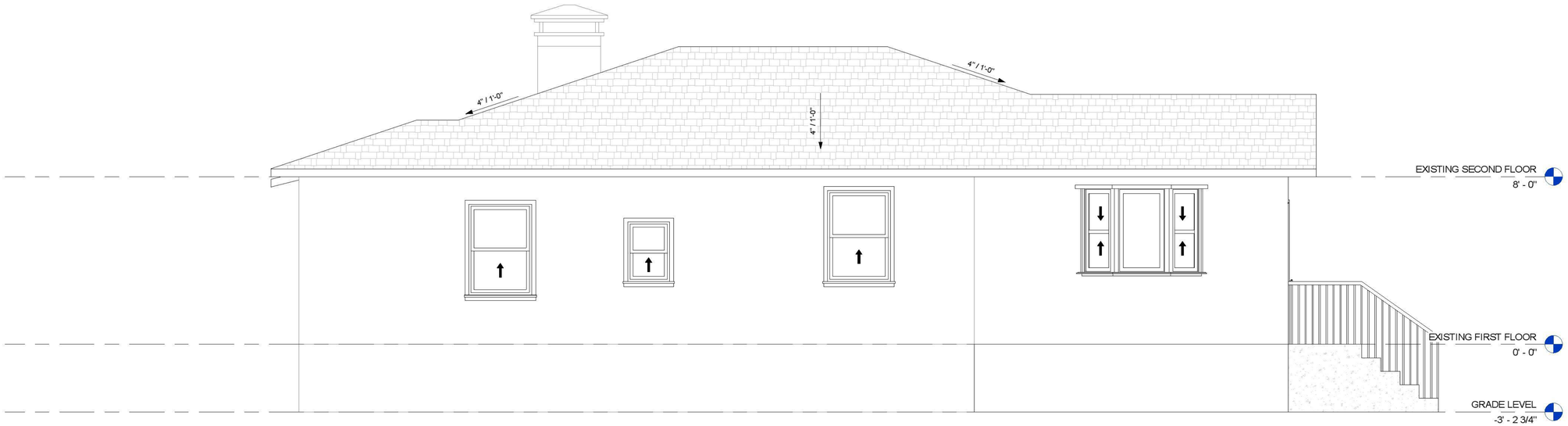

1
A7

PROPOSED - RIGHT ELEVATION

SCALE: 3/8" = 1'-0"

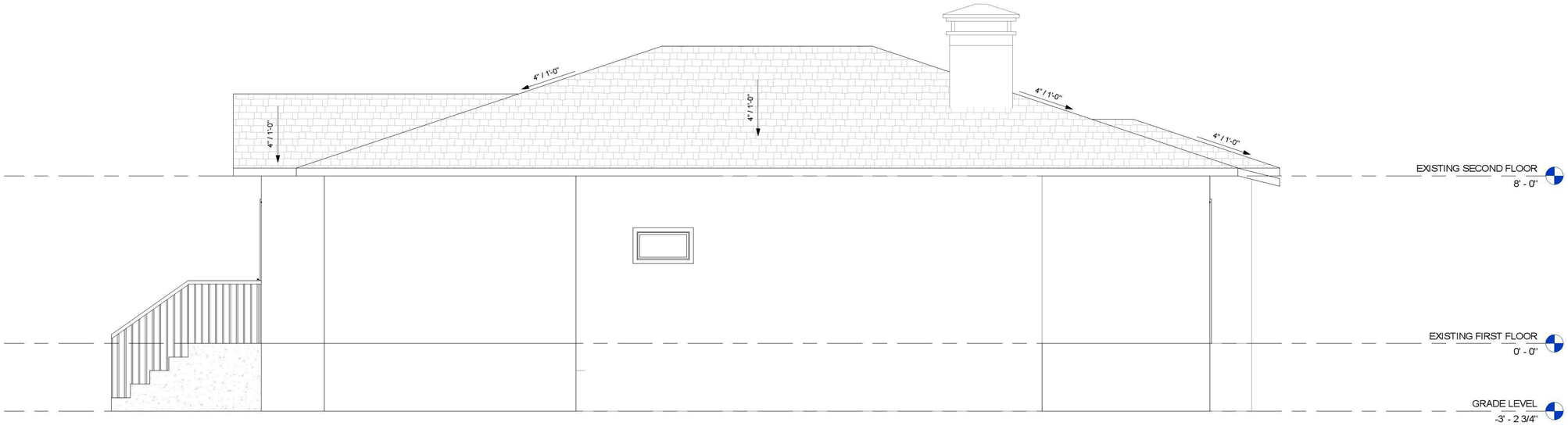

2
A7

PROPOSED - LEFT ELEVATION

SCALE: 3/8" = 1'-0"

JIM GISH, INC.

JG DESIGN • BUILD

BASSETT

1372 Military Ave, Seaside, CA 93955, USA

Seal

REGISTERED PROFESSIONAL ENGINEER
JAMES E AUSTIN
4782
STRUCTURAL
STATE OF CALIFORNIA

3/28/2025

TO THE BEST OF MY KNOWLEDGE, THE BUILDING DESIGN PLANS AND SPECIFICATIONS COMPLY WITH FLORIDA BUILDING CODE

NOT FOR CONSTRUCTION

date	submission / revision	no.

PROPOSED - EXTERIOR ELEVATION 02

scale:	3/8" = 1'-0"
drawn by:	Author
checked by:	Checker
date:	Issue Date
project number:	Project Number

A7

DESIGN CRITERIA

A. GENERAL	
BUILDING CODE	2022 CBC /w LA
RISK CATEGORY	II
B. SOIL PARAMETERS	
SOIL ENGINIEER	N/A
REPORT NUMBER	N/A
DATE	N/A
ALLOWABLE SOIL BEARING PRESSURE	1500 psf
ALLOWABLE PASSIVE PRESSURE	-
C. WIND DESIGN PARAMETERS	
EXPOSURE CATEGORY	C
DESIGN SPEED	92 mph
D. SEISMIC DESIGN PARAMETERS	
SEISMIC DESIGN CATEGORY	D
SEISMIC IMPORTANCE FACTOR, Ie	1
SITE CLASS	D-DEFAULT
SHORT PERIOD SPECTRAL ACCELERATION, Ss	1.54
1ST PERIOD SPECTRAL ACCELERATION, S1	0.49
SHORT PERIOD ACCELERATION PARAMETER, SDS	1.22
1 SECOND ACCELERATION PARAMETER, SD1	0.82
RESPONSE MODIFICATION FACTOR, R	6.5
SEISMIC RESPONSE COEFFIECIENT, Cs	0.24
DESIGN BASE SHEAR V = 0.7CsW	0.157W

E. GRAVITY DESIGN PARAMETERS (psf)

LOAD	ROOF	CEILING	DECK	FLOOR	EXTERIOR WALL	INTERIOR WALL
DEAD	15	8	15	15	17	10
ROOF LIVE	20					
LIVE	-	10	40	40		

GENERAL NOTES

1. REFERENCE TO CODES, RULES, REGULATIONS, STANDARDS, MANUFACTURER'S INSTRUCTIONS OR REQUIREMENTS OF REGULATORY AGENCIES IS TO THE LATEST PRINTED EDITION OF EACH IN EFFECT AT THE DATE OF SUBMISSION OF BID UNLESS THE DOCUMENT DATE IS SHOWN.
2. STRUCTURAL INFORMATION SHOWN ON FRAMING PLANS IS FOR THE MAIN STRUCTURAL ELEMENTS. NON-STRUCTURAL ELEMENTS SHALL BE CONSTRUCTED PER APPROVED CODE REQUIREMENTS.
3. DETAILS OF CONSTRUCTION NOT SHOWN SHALL BE OF SAME NATURE AS THOSE SHOWN FOR SIMILAR CONDITIONS. REFER TO THE TYPICAL DETAIL SHEETS FOR TYPICAL DETAILS OF CONSTRUCTION. TYPICAL DETAILS APPLY TO ALL CONSTRUCTION UNLESS SPECIFICALLY NOTED OR SHOWN OTHERWISE. WHERE CONDITIONS REQUIRE MODIFICATIONS OF A TYPICAL DETAIL, THE CONTRACTOR SHALL SUBMIT MODIFIED DETAIL FOR APPROVAL BY THE EOR TO FABRICATION AND INSTALLATION.
4. DO NOT USE SCALED DIMENSIONS, USE WRITTEN DIMENSIONS. WHERE NO DIMENSION IS PROVIDE, CONSULT THE ARCHITECT FOR CLARIFICATION BEFORE PROCEEDING WITH THE WORK. FIELD MEASURE EXISTING DIMENSIONS NOT NOTED.
5. OMISSIONS OR CONFLICTS BETWEEN VARIOUS ELEMENTS OF THE DRAWINGS, NOTES, AND DETAILS SHALL BE BROUGHT TO THE ATTENTION OF THE ARCHITECT AND RESOLVED BEFORE PROCEEDING WITH THE WORK.
6. THE CONTRACTOR SHALL VERIFY THE LOCATION OF EXISTING UTILITIES BEFORE BEGINNING WORK. SPECIAL CARE SHALL BE TAKEN TO PROJECT UTILITIES THAT ARE TO REMAIN IN SERVICE DURING CONSTRUCTION.
7. THE CONTRACTOR SHALL INFORM THE ENGINEER IN WRITING OF ANY DEVIATION FROM THE CONTRACT DOCUMENTS.
8. DRAWINGS AND SPECIFICATIONS REPRESENT FINISHED STRUCTURE. CONTRACTOR SHALL BE RESPONSIBLE FOR MEANS AND METHODS OF CONSTRUCTION, INCLUDING BUT NOT LIMITED TO SHORING AND TEMPORARY BRACING. THE CONTRACTOR SHALL TAKE ALL NECESSARY MEASURES TO INSURE SAFETY OF ALL PERSONS AND STRUCTURES AT THE SITE AND ADJACENT TO THE SITE. OBSERVATION VISITS TO THE SITE BY THE ARCHITECT, ENGINEER OR CONSTRUCTION MANAGER SHALL NOT RELIEVE THE CONTRACTOR OF SUCH RESPONSIBILITY.
9. SPECIFICATIONS RELATED TO WATERPROOFING, INCLUDING BUT NOT LIMITED TO MEMBRANES, WATERSTOPS, SEALANTS, FLASHING, VAPOR BARRIER, ARE AS SPECIFIED BY ARCHITECT/WATER PROOFING CONSULTANT.
10. CONSTRUCTION MATERIALS SHALL BE DISTRIBUTED WHEN PLACED ON THE STRUCTURE SUCH THAT LOADS DO NOT EXCEED DESIGN LIVE LOADS OR RESULT IN AN UNBALANCED CONDITION.

CONCRETE NOTES

1. CONCRETE IS REINFORCED AND CAST-IN-PLACE UNLESS OTHERWISE NOTED. WHERE REINFORCING IS NOT SPECIFICALLY SHOWN OR WHERE DETAILS ARE NOT GIVEN, PROVIDE REINFORCING SIMILAR TO THAT SHOWN FOR SIMILAR CONDITIONS, SUBJECT TO REVIEW BY THE OWNER'S REPRESENTATIVE.
2. ALL PHASES OF WORK PERTAINING TO THE CONCRETE CONSTRUCTION SHALL CONFORM TO THE LATEST EDITION OF ACI318 "BUILDING CODE REQUIREMENTS FOR REINFORCED CONCRETE", AND THE LATEST EDITION OF ACI117 "SPECIFICATIONS FOR TOLERANCES FOR CONCRETE CONSTRUCTION AND MATERIALS".
3. ALL STRUCTURAL CONCRETE SHALL HAVE A MINIMUM COMPRESSIVE STRENGTH AT 28 DAYS SHALL BE MIN 2500 PSI, U.N.O.
4. NO MORE THAN ONE GRADE OF CONCRETE SHALL BE ON THE JOB SITE AT ANY ONE TIME.
5. CONCRETE MIXES SHALL BE PREPARED WITH TYPE II/V PORTLAND CEMENT CONFORMING TO ASTM C150.
6. CONCRETE MIX DESIGNS CONTAINING FLY ASH MAY BE USED WHERE CONCRETE IS NOT VISUALLY EXPOSED. FLY ASH SHALL CONFORM WITH ASTM C618 AND MAY REPLACE UP TO 20% PORLAND CEMENT BY VOLUME.
7. CONCRETE MIX PROPORTIONING SHALL MEET STATISTICAL STRENGTH REQUIREMENTS OF ACI 301 AND ACI 214R. MIX DESIGNS SHOWING COMPLIANCE WITH STRENGTH REQUIREMENTS TO BE SUBMITTED TO E.O.R FOR REVIEW.
8. NORMAL WEIGHT CONCRETE AGGREGATES SHALL CONFORM TO ASTM C33. LIGHT WEIGHT CONCRETE AGGREGATES SHALL CONFORM TO ASTM C330.
9. CONCRETE STRENGTH TEST REPORTS SHALL BE IN COMPLIANCE WITH ACI 318 AND SHALL BE SUBMITTED TO E.O.R.
10. WATER USED IN MIXING CONCRETE SHALL CONFORM WITH ASTM C1602.
11. THOROUGHLY CLEAN AND ROUGHEN ALL HARDENED CONCRETE AND MASONRY SURFACES TO RECEIVE NEW CONCRETE. INTERFACE SHALL BE ROUGHENED TO A FULL AMPLITUDE OF 1/4", U.O.N.

REIFORCING STEEL NOTES

1. REINFORCING STEEL SHALL CONFORM TO ASTM A615, GRADE 60 FOR ALL SIZES.
2. ALL REINFORCING TO BE ACCURATELY AND SECURELY LOCATED PRIOR TO POURING CONCRETE.
3. ALL HORIZONTAL REINFORCEMENT TO HAVE MATCHING DOWELS AT CORNERS OF WALLS. ALL VERTICAL REINFORCEMENT TO HAVE MATCHING DOWELS TO FOOTING, U.O.N.
4. COVERAGE SHALL BE: 3" CLEAR FOR CONCRETE CAST AGAINST EARTH, 2" CLEAR FOR CONCRETE EXPOSED TO MOISTURE BUT NOT CAST AGAINST EARTH, AND 1 1/2" FOR ALL OTHER CONDITIONS. (U.N.O)

FOUNDATION NOTES

1. SEE NOTE #3 UNDER REINFORCED CONCRETE FOR CONCRETE STRENGTH.
2. THE CBC CHAPTER 18 SHALL BE FOLLOWED AND SHALL BE CONSIDERED MINIMUM REQUIREMENTS UNLESS MORE STRINGENT REQUIREMENTS ARE PRESENTED IN THE SPECIFICATIONS OR ON THE DRAWINGS.
3. IF NO GEOTECHNICAL REPORT PROVIDED, IT IS LICENSED GENERAL CONTRACTOR OR OWNER BUILDER RESPONSIBILITY TO CHECK THE STRUCTURE WILL BE LOCATED ENTIRELY ON UNDISTURBED - NON EXPANSIVE NATIVE SOIL. IF THEY SUSPECTED FILL, EXPANSIVE SOIL OR ANY GEOLOGIC INSTABILITY MUST REACH TO GEOTECHNICAL ENGINEER AND EOR TO ADJUST THE DESIGN ACCORDINGLY.
4. CONCRETE SHALL BE TO THE STRENGTH AND SLUMP AS SPECIFIED PER STRUCTURAL DESIGN, AND CONSIST OF PORTLAND CEMENT ASTM C-150 TYPE V AND BUILDING CODE SECTION 1904 (ACI 318 SECTION 19.3.2.1) WHEN EXPOSED TO SULFATE CONTAINING
5. ADMIXTURES IN CONCRETE MIX. CONTAINING CALCIUM CHLORIDES SHALL NOT BE USED.
6. PLACEMENT SHALL BE IN ONE CONTINUOUS OPERATION UNLESS OTHERWISE SPECIFIED. SLAB SURFACE SHALL BE CURED WITH 'HUNTS' COMPOUND OR EQUAL OR CURED WITH OTHER METHODS IN ACCORDANCE WITH GOOD CONSTRUCTION PRACTICE AT CONTRACTOR'S OPTION.
7. CONTRACTOR SHALL DAMPEN SLAB UNDERLAYMENT OF SAND/MEMBRANE JUST PRIOR TO CONCRETE PLACEMENT TO ASSIST UNIFORM CONCRETE CURING. SLABS MUST NOT BE POURED DURING OR IMMEDIATELY AFTER RAINSTORMS. THE SPECIFIED SAND OVER VISQUEEN SHOULD NOT BE SATURATED AT THE TIME OF THE CONCRETE POUR. ANY FREE
8. THE BOTTOMS OF FOOTING EXCAVATIONS SHALL BE LEVEL, CLEAN AND FREE OF LOOSE MATERIAL OR WATER WHEN CONCRETE IS PLACED. OVER EXCAVATION SHALL BE FILLED WITH CONCRETE OR PROPERLY COMPACTED FILL THAT HAS BEEN . BACKFILL SHALL NOT BE PLACED UNTIL SUPPORTING FOUNDATIONS, WALLS AND SLAB HAVE ATTAINED SUFFICIENT STRENGTH TO SUPPORT LATERAL SOIL PRESSURE.
9. FOOTINGS SHALL BEAR ON NATIVE SOIL.
10. ALL EXCAVATIONS SHALL BE PROPERLY BACKFILLED WITH NON-EXPANSIVE SOIL BUT NOT BEHIND RETAINING WALLS BEFORE CONCRETE OR MASONRY ATTAINS ITS FULL DESIGN STRENGTH.
11. REQUIREMENTS FOR PRE-SATURATION OF SUBGRADE SOILS AND DAYLIGHT SETBACK OF EXTERIOR FOOTINGS FROM ANY DESCENDING SLOPE SHALL COMPLY
12. FINISH GRADE AROUND THE PERIMETER OF SLAB SHALL BE CONSTRUCTED SUCH THAT RAIN AND IRRIGATION WATER IS DRAINED AWAY FROM THE SLAB.
13. ALL SITE AND PAD PREPARATION, SUCH AS BUT NOT LIMITED TO SHADING, COMPACTING OF THE FILL, PRE-SATURATION, AND CONCRETE SLAB BASE PREPARATION.
14. FOUNDATION DRAWINGS PREPARED BY E.O.R. REFLECT THE STRUCTURAL REQUIREMENTS. REFER TO ARCHITECTURAL PLANS FOR DIMENSIONS, DEPRESSIONS, SLOPE, SHELVES, PATIOS, STOOPS AND PORCHES NOT SHOWN IN FOUNDATION DRAWINGS. ACCURACY OF THE DIMENSIONS AND FINAL FIT OF THE BUILDING SHALL BE REVIEWED BY THE ARCHITECT AND THE CONTRACTOR PRIOR TO CONSTRUCTION.
15. WHERE NEW CONCRETE IS PLACED AGAINST EXISTING CONCRETE, THE EXISTING CONCRETE SHALL BE ROUGHENED TO A MINIMUM 1/4" AMPLITUDE.
16. WAITING PERIOD FOR CONCRETE SLABS-ON-GRADE PRIOR TO START OF CONSTRUCTION IS AS FOLLOWS:
    a. DO NOT WALK ON SLAB UNTIL 24 HOURS AFTER CONCRETE HAS BEEN POURED.
    b. BEGIN WALL FRAMING 4-5 DAYS AFTER CONCRETE POURED.
    c. BEGIN ROOF/FLOOR FRAMING 7-10 DAYS AFTER CONCRETE POURED.
    d. DO NOT LOAD ROOF PRIOR TO 14 DAYS AFTER CONCRETE POURED.
15. NO PIPES OR CONDUITS SHALL EXTEND UNDER ISOLATED COLUMN FOOTING OR UNDER CONTINUOUS WALL FOOTINGS UNLESS SPECIFICALLY DETAILED OR APPROVED BY THE ARCHITECT, STRUCTURAL ENGINEER AND THE BUILDING OFFICIAL.
16. ALUMINUM CONDUIT, ALUMINUM SLEEVES AND ALUMINUM EMBEDS ARE NOT PERMITTED IN CONCRETE.
17. ALL GRADE BEAMS SHALL BE POURED MONOLITHICALLY FOR THEIR ENTIRE LENGTH.
18. ALL CONDUITS SHALL BE PLACED WITHIN THE MIDDLE ONE-THIRD OF THE SLAB THICKNESS. THE MAXIMUM SIZE OF CONDUITS SHALL BE 1 1/4" DIAMETER AND SHALL BE SPACED NO CLOSER (TO EACH OTHER OR REINFORCING STEEL) THAN 4 INCHES UNLESS PRIOR APPROVAL IS OBTAINED FROM THE STRUCTURAL ENGINEER.
19. PROVIDE MIN. (1) #4 REINFORCING FOR ELECTRICAL GROUND, LOCATION TO BE VERIFIED WITH THE ELECTRICAL CONTRACTOR.
20. ALL HOLDOWNS AND POST ANCHORS SHALL BE TIED IN PLACE PRIOR TO FOUNDATION INSPECTION.

WOOD SPECIFICATIONS & NOTES

1. SAWN FRAMING LUMBER - DOUGLAS FIR-LARCH U.N.O:
   - BEAMS/ POST/ RAFTERS & ALL OTHER STRUCTURAL FRAMING: 2x, 4x MEMBERS: NO. 2; 6x, 8x MEMBERS: NO. 1
   - STUDS: USE STUD GRADE IF HEIGHT UP TO 9'-0" AND NO. 2 IF TALLER THAN 9'-0".
   - PLATES AND BLOCKING: NO. 2
   - ALL LUMBER IN CONTACT WITH CONCRETE OR MASONRY TO BE PRESSURE PRESERVATIVE TREATED.
   - ALL FRAMING LUMBER SHALL HAVE 19% MAXIMUM MOISTURE CONTENT AT TIME OF INSTALLATION AND FABRICATION.
2. ENGINEERED LUMBER:
   ALL VERSA-LAM LAMINATED VENEER LUMBER MEMBERS (LVL) SHALL BE FABRICATED AND ERECTED IN ACCORDANCE WITH ICC ES ESR-1040
   - BEAM/HEADERS WITH 1 3/4" WIDE: Fb = 2800 psi, Fv = 285 psi, E = 2.0E6 psi
   - BEAM/HEADERS WITH 3 1/2" AND WIDER: Fb = 3100 psi, Fv = 285 psi, E = 2.0E6 psi
   - RIMBOARD: Fb = 1750 psi, Fv = 225 psi, E = 1.3E6 psi
3. DIAPHRAGM (U.N.O. ON PLAN):
   - ROOF: USE 15/32" APA RATED SHEATHING EXP 1 WITH A MIN. PANEL INDEX OF 32/16 WITH 8D COMMON NAILS (B.N. @ 6" O.C., E.N. @ 6" O.C., F.N. @ 12" O.C.)
   - FLOOR: 23/32" APA RATED STURD-I-FLOOR T&G EXP I WITH MIN. SPAN RATING OF 24" O.C. WITH 10D COMMON NAILS (B.N. @ 6" O.C., E.N. @ 6" O.C., F.N. @ 12" O.C.)
   - REFER TO NER 108 FOR INSTALLATION AND CONDITIONS OF USE
   - ALL STRUCTURAL RATED PANELS MUST BE STAMPED BY ONE OF THE FOLLOWING APPROVED AGENCIES, APA, PFS/TECO OR PITTSBURG.
   - ADHESIVE USED TO ATTACH FLOOR SHEATHING TO FRAMING ELEMENTS SHALL CONFORM WITH APA SPECIFICATION AFG-01.
   - ROOF DIAPHRAGM NAILING TO BE INSPECTED BEFORE COVERING. FACE GRAIN OF PLYWOOD SHALL BE PERPENDICULAR TO SUPPORTS. FLOOR SHALL HAVE TONGUE AND GROOVE OR BLOCKED PANEL EDGES. PLYWOOD SPANS SHALL CONFORM WITH TABLE 2304.8(1).
4. STRUCTURAL GLUED LAMINATED MEMBERS:
   a. ALL STRUCTURAL GLUED LAMINATED MEMBERS SHALL BE COMBINATION 24F-V4 DF/DF (24F-V8 DF/DF AT ALL CONTINUOUS OR CANTILEVER APPLICATIONS) FABRICATED AND ERECTED IN ACCORDANCE WITH ANSI/ASTM STANDARD A190.1 AND ASTM D3737.
   b. ADHESIVE SHALL BE EXTERIOR TYPE ADHESIVE MEETING REQUIREMENTS OF US COMMERCIAL STANDARD PS-56 AND ASTM D3737.
   c. THE FABRICATOR SHALL FURNISH AITC CERTIFICATES TO THE STRUCTURAL ENGINEER AND THE BUILDING INSPECTION DEPARTMENT PRIOR TO FRAMING INSPECTION.
5. TYPICAL STUD WALL TABLE:

SIZE, HEIGHT AND SPACING OF WOOD STUDS						
STUD SIZE	BEARING WALLS 10ft MAX. MAXIMUM SPACING WHEN SUPPORTING				NON-BEARING WALLS	
	ROOF	ONE FLOOR & ROOF	TWO FLOOR & ROOF	ONE FLOOR ONLY	STUD HEIGHT	MAX. SPACING
	(inches)	(inches)	(inches)	(inches)	(feet)	(inches)
2x4	24	16	NOT ALLOWED	24	14	24
3x4	24	24	16	24	14	24
2x6	24	24	16	24	20	24
2-2x4	-	-	16	-	-	-
2-2x6	-	-	24	-	-	-

BEARING WALLS EXCEEDING 10'-0" MUST BE DESIGNED CASE BY CASE.

6. TYPICAL CEILING JOISTS WITH DEAD LOAD DL = 6.0 psf, LIVE LOAD LL = 10.0 psf:

2x4		2x6		2x8	
SPACING	MAX SPAN	SPACING	MAX. SPAN	SPACING	MAX SPAN
12"	9'-10"	12"	16'-0"	12"	20'-5"
16"	8'-10"	16"	14'-5"	16"	18'-4"
24"	7'-7"	24"	12'-6"	24"	15'-9"

7. I-JOISTS SHALL BE MANUFACTURED BY WEYERHAEUSER OR EQUIVALENT APPROVED ICC MANUFACTURED PRODUCT.
8. FRAMING CONTRACTOR SHOULD NOTIFY E.O.R. IN WRITING IF THE ROOFING WEIGHT EXCEEDS 10 psf PRIOR TO CONSTRUCTION.
9. STUD WALLS PERPENDICULAR TO A CONCRETE OR MASONRY WALL SHALL BE BOLTED TO THE CONCRETE OR MASONRY WALL WITH 5/8" DIAMETER X 8" A307 BOLTS AT TOP, MID-HEIGHT AND BOTTOM.
10. INSTALL WINDOWS AND DOORS IN STUD WALLS AFTER DEAD LOADS ARE APPLIED, AND PROVIDE A 1/2" SHIM SPACE AT THE HEAD CONDITION.
11. ALL POSTS SHALL BE FULL HEIGHT FROM FOUNDATION TO ROOF. WHERE POSTS ARE DISCONTINOUS AT JOIST SPACE AND/OR FROM TOP OF BEAMS/HEADERS TO LOWER TOP PLATE, BLOCK THIS SPACE WITH STUD POST.
12. BLOCKING AND BRIDGING - PROVIDE AS FOLLOWS:
    - 2x SOLID BLOCKING BETWEEN JOISTS AND RAFTERS OVER SUPPORT.
    - 2x SOLID BLOCKING BETWEEN JOISTS AND RAFTER NOT OVER 8'-0" ON CENTER NOR MORE THAN 8'-0" FROM SUPPORT.
    - OMIT BLOCKING BETWEEN CEILING JOISTS AND RAFTERS 2x8 AND SMALLER.
13. ALL VERTICAL PIPES THROUGH PLATES AND/OR SOLID RIM BEAMS MUST BE DRILLED CLEAN CUT W/ 1/16" TOLERANCE. DO NOT NOTCH OR CUT PLATES.
14. HOLD-DOWN CONNECTOR BOLTS INTO WOOD FRAMING REQUIRE APPROVED PLATE WASHERS; AND HOLD-DOWNS SHALL BE FINGER TIGHT AND WRENCH TURNED JUST PRIOR TO COVERING THE WALL FRAMING. CONNECTOR BOLTS INTO WOOD FRAMING REQUIRE STEEL PLATE WASHERS ON THE POST ON THE OPPOSITE SIDE OF THE ANCHORAGE DEVICE. PLATE SIZE SHALL BE A MINIMUM OF 0.299 INCH BY 3 INCHES BY 3 INCHES.(2305.5)

DEFERRED SUBMITTALS

1. ELEMENTS OF STRUCTURE THAT ARE MARKED "BY OTHERS" SHALL BE EXCLUDED FROM THIS SCOPE OF WORK.
2. GENERAL CONTRACTOR SHALL FIRST SUBMIT SEPARATE DRAWINGS FOR THE ABOVE ELEMENTS TO THE EOR FOR THEIR REVIEW AND IF APPROVED, THEN SUBMIT TO THE BUILDING OFFICIALS FOR THEIR REVIEW AND APPROVAL.
3. CITY APPROVAL SHALL BE OBTAINED PRIOR TO INSTALLATION OF ELEMENT SUBJECTED TO DEFERRED APPROVAL.

SHOP DRAWINGS NOTES

1. SUFFICIENT COPIES OF SHOP DRAWINGS FOR ANY MEMBER OR PRODUCT DESIGNED BY ENTITY OTHER THAN E.O.R. SHALL BE SUBMITTED TO E.O.R. PRIOR TO FABRICATION FOR REVIEW. CONTRACTOR SHALL SUBMIT SHOP DRAWINGS OF REINFORCEMENT FOR CONCRETE MASONRY WALLS, CONCRETE COMPONENTS WITH COMPRESSIVE STRENGTH MORE THAN 2500 PSI AND STRUCTURAL STEEL TO E.O.R. TO REVIEW AND OBTAIN APPROVAL PRIOR TO FABRICATION. SHOP DRAWINGS SHALL BE ORIGINAL DRAWINGS PREPARED FOR THE PROJECT SPECIFIC INFORMATION, DRAWN ACCURATELY TO SCALE. DIRECT COPIES AND MODIFIED REPRODUCTIONS OF THE CONTRACT DOCUMENTS WILL NOT BE ACCEPTED. ALLOW SUFFICIENT TIME FROM THE RECEIPT OF COMPLETE SUBMITTAL FOR REVIEW AND PROCESSING BY E.O.R..
2. REVIEW OF SHOP DRAWINGS BY E.O.R. DOES NOT RELIEVE THE ENGINEER RESPONSIBLE FOR THE DESIGN OR THE CONTRACTOR FROM COMPLIANCE WITH BUILDING CODE.
3. E.O.R.S REVIEW OF THE SHOP DRAWINGS CONSISTS OF CHECKING GENERAL CONFORMANCE WITH STRUCTURAL DRAWINGS. DESIGN ACCURACY OF SUCH PRODUCT, DIMENSIONS AND QUANTITY OF THE PRODUCT IS NOT REVIEWED BY E.O.R..

NAILING & HARDWARE NOTES

1. CONNECTORS FOR WOOD CONSTRUCTION NOTED ON PLANS AND DETAILS SHALL BE SIMPSON COMPANY STRONG-TIE CONNECTORS OR APPROVED EQUAL.
2. ALL JOIST HANGERS SHALL BE SIMPSON U HANGER, ALL BEAM HANGERS SHALL BE SIMPSON HU HANGERS U.N.O. ON PLAN OR DETAIL. FOLLOW MANUFACTURER'S RECOMMENDATIONS FOR INSTALLATION.
3. ALL MACHINE BOLTS SHALL CONFORM TO ASTM A307.
4. TYPICALLY SILLS ON CONCRETE FOOTING SHALL BE ANCHORED WITH 5/8" DIAMETER X 12" MIN. LENGTH MACHINE BOLTS WITH 7" EMBEDMENT AT 72" O.C.. LOCATE BOLTS 6" MIN. AND 12" MAX. FROM EACH END OF EACH STICK. THERE SHALL BE AT LEAST 2 BOLTS IN EACH STICK.
5. AT SHEAR WALLS, ANCHOR BOLT SPACING NOT OVER 48" O.C. SEE SHEAR WALL SCHEDULE FOR SPECIFIC SPACING OF ANCHOR BOLTS WHICH MAY BE NOTED AS LESS THAN 48" O.C.. ANCHOR BOLTS SHALL BE INSTALLED WITH PLATE WASHERS OF MIN. 3" SQ. x 0.229" THICK BETWEEN SILL PLATE AND NUT. EDGE(S) OF PLATE WASHERS SHALL BE 1/2" MAX. FROM
6. AT NON SHEAR WALL, ROUND WASHERS SHALL BE USED ON ALL BOLTS AND SHOULD CONFORM WITH ANSI/ASME B 18.22.1. USE MIN. 1 3/8" Ø x 7/64" THICK WASHER FOR 1/2" Ø BOLT, 1 3/4" Ø x 9/64" THICK WASHER FOR 5/8" Ø BOLT AND 2 1/2" Ø x 11/64" THICK WASHER FOR 1" Ø BOLT. U.N.O.
7. AT INTERIOR NON-SHEAR WALLS, USE SIMPSON PHNW SERIES 0.145 Ø PINS WITH A PENETRATION OF 1 1/4" INTO SLAB AT 16" O.C. TO BE INSTALLED IN ACCORDANCE WITH ICC ESR-2138.
8. WHERE NOTCHES FOR PIPES, ETC. , EXCEED 1/3 THE WIDTH OF THE SILL, PLACE A BOLT WITHIN 6" OF EACH SIDE OF NOTCH. TIEDOWN BOLTS SHALL NOT BE CONSIDERED AS SILL BOLTS.
9. BOLT HOLES IN WOOD AND STEEL SHALL BE THE DIAMETER OF THE BOLT PLUS 1/16"
10. FASTENERS PENETRATING PRESSURE-PRESERVATIVE TREATED AND FIRE-RETARDANT TREATED WOOD SHALL BE HOT DEPPED GALVANIZED PER ASTM A153, CLASS D.
11. ALL NAILS SHALL BE SINKER NAILS AND STAGGERED U.N.O., EXCEPT AS SHOWN IN NAILING SCHEDULE.
12. ALL DIAPHRAGM AND SHEAR WALL NAILING SHALL UTILIZE COMMON NAILS OR GALVANIZED BOX.
13. LAG SCREWS PER ANSI/ASME STANDARD B18.2.1 PROVIDE LEAD HOLE SAME DIAMETER AND DEPTH AS SHANK AND THEN DRILL HOLE 60%-70% OF SHANK DIAMETER FOR THREADED PORTIONS.

NAILING SCHEDULE TABLE R602.3 (1)

CONNECTION	NAILING	LOCATION
1. JOIST TO SILL OR GIRDER	3-8D	TOENAIL
2. BRIDGING TO JOIST	2-8D	TOENAIL EA. END
3. 1" x 6" SUBFLOOR OR LESS TO EACH JOIST	2-8D	FACE NAIL
4. WIDER THAN 1" x 6" SUBFLOOR TO EACH JOIST	3-8D	FACE NAIL
5. 2" SUBFLOOR TO JOIST OR GIRDER	2-16D	BLIND AND FACE NAIL
6. SOLE PLATE TO JOIST OR BLOCKING	16D (BOX) AT 16" O.C.	TYPICAL FACE NAIL
SOLE PLATE TO JOIST OR BLOCKING AT BRACED WALL PANEL	(3) 16D (BOX) AT 16"	BRACED WALL PANELS
7. TOP PLATE TO STUD	2-16D	BLIND AND FACE NAIL
8. STUD TO SOLE PLATE 2x4 STUD	4-8D 2-16D	TOENAIL END NAIL
2x6 STUD	6-8D 4-16D	TOENAIL END NAIL
2x8 STUD	8-8D 6-16D	TOENAIL END NAIL
9. DOUBLE STUDS	16D (BOX) AT 24" O.C.	FACE NAIL
10. DOUBLED TOP PLATES	16D (BOX) AT 16" O.C.	TYPICAL FACE NAIL
DOUBLE TOP PLATES	8-16D	LAP SPLICE
11. BLOCKING BETWEEN JOIST OR RAFTERS TO TOP PLATE	3-8D	TOENAIL
12. RIM JOIST TO TOP PLATE	8D AT 6" O.C.	TOENAIL
13. TOP PLATES, LAPS AND INTERSECTIONS	2-16D	FACE NAIL
14. CONTINUOUS HEADER, TWO PIECES	16D	16" O.C. ALONG EDGE
15. CEILING JOISTS TO PLATE	3-8D	TOENAIL
16. CONTINUOUS HEADER TO STUD	4-8D	TOENAIL
17. CEILING JOISTS, LAPS OVER PARTITIONS	3-16D	FACE NAIL
18. CEILING JOISTS TO PARALLEL RAFTERS	3-16D	FACE NAIL
19. RAFTER TO PLATE	3-8D	TOENAIL
20. 1" DIAGONAL BRACE TO EACH STUD AND PLATE	2-8D	FACE NAIL
21. 1" x 8" SHEATHING TO EACH BEARING	3-8D	FACE NAIL
22. WIDER THAN 1" x 8" SHEATHING TO EACH BEARING	3-8D	FACE NAIL
23. BUILT-UP CORNER STUDS	16D	24" O.C. 16" O.C.
24. BUILT-UP GIRDER AND BEAMS	20D AT 32" O.C. 2-20D	FACE NAIL AT TOP & BOTTOM STAGGERED ON OPPOSITE SIDES FACE NAIL AT ENDS & ATEACH SPLICE
25. 2" PLANKS	16D	AT EACH BEARING
26. COLLAR TIE TO RAFTER	3-10D	FACE NAIL
27. JACK RAFTER TO HIP	3-10D 2-16D	TOENAIL FACE NAIL
28. ROOF RAFTER TO 2-BY RIDGE BEAM	2-16D 2-16D	TOENAIL FACE NAIL
29. JOIST TO BAND JOIST	3-16D	FACE NAIL
30. LEDGER STRIP	3-16D	FACE NAIL

NOTES: 1. COMMON NAILS SHALL BE USED (U.N.O.)
2. JOIST CAN BE EITHER SAWN LUMBER OR I-JOIST PER PLAN

SPECIAL INSPECTION:

1. SPECIAL INSPECTION SHALL BE PROVIDED PER CBC SECTION 1704 & 1707, SEE INSPECTION SCHEDULE BELOW, ONLY CHECKED ITEMS ARE REQUIRED.
2. THE OWNER SHALL EMPLOY ONE OR MORE SPECIAL INSPECTORS TO PROVIDE INSPECTIONS DURING CONSTRUCTION. THE SPECIAL INSPECTOR SHALL BE A QUALIFIED PERSON WHO SHALL DEMONSTRATE COMPETENCE, TO THE SATISFACTION OF THE BUILDING OFFICIAL, FOR INSPECTION OF THE PARTICULAR TYPE OF CONSTRUCTION OR OPERATION REQUIRING SPECIAL INSPECTION.
3. SPECIAL INSPECTIONS ARE NOT REQUIRED WHERE THE WORK IS DONE ON THE PREMISES OF A FABRICATOR REGISTERED AND APPROVED TO PERFORM SUCH WORK WITHOUT SPECIAL INSPECTION. APPROVED FABRICATORS MUST SUBMIT A CERTIFICATE OF COMPLIANCE FOR OFFSITE FABRICATIONS SUCH AS STRUCTURAL STEEL, PRECAST CONCRETE, GLUED LAMINATED TIMBER, ETC.
4. ALL INSPECTIONS SHALL BE PERFORMED BY INDEPENDENT SPECIAL INSPECTORS. JOB SITE VISITS BY THE STRUCTURAL ENGINEER OR BUILDING OFFICIAL DO NOT CONSTITUTE AND ARE NOT A SUBSTITUTE FOR INSPECTIONS BY A SPECIAL INSPECTOR.
5. ALL INSPECTION REPORTS SHALL BE SUBMITTED TO BUILDING OFFICIAL AND E.O.R. THE FINAL REPORTS BY THE SPECIAL INSPECTORS MUST CERTIFY THAT THE ENTIRE STRUCTURAL SYSTEM COMPLIES WITH THE APPROVED PLANS AND SPECIFICATIONS.
6. IT IS SOLELY THE CONTRACTOR'S RESPONSIBILITY TO SEE THAT THESE INSPECTIONS ARE PERFORMED.
7. WORK REQUIRING SPECIAL INSPECTION SHALL BE INSPECTED BY THE SPECIAL INSPECTOR WHO IS PRESENT IN THE AREA WHERE THE WORK IS PERFORMED AND AT THE COMPLETION OF WORK. CONTINUOUS INSPECTION CONSISTS OF FULL TIME INSPECTION; PERIODIC INSPECTION CONSISTS OF PART TIME OR INTERMITTENT INSPECTION.
8. STRUCTURAL WOOD, PERIODIC SPECIAL INSPECTION IS REQUIRED FOR WOOD SHEARWALLS, SHEAR PANELS, AND DIAPHRAGMS, INCLUDING NAILING, BOLTING, ANCHORING, AND OTHER FASTENING OF COMPONENTS OF THE SEISMIC FORCE RESISTING SYSTEM, INCLUDING WOOD SHEARWALLS, WOOD DIAPHRAGMS, DRAG STRUTS, BRACES, SHEAR PANELS, AND HOLDOWNS, EXCEPTION: SPECIAL INSPECTION IS NOT REQUIRED FOR WOOD SHEARWALLS, SHEAR PANELS AND DIAPHRAGMS, INCLUDING NAILING, BOLTING, ANCHORING AND OTHER FASTENING TO OTHER COMPONENTS OF THE SEISMIC FORCE RESISTING SYSTEM, WHERE THE FASTENER SPACING OF THE SHEATHING IS MORE THAN 4 INCHES ON CENTER. INSPECTIONS SHALL BE PERFORMED BEFOR COVERING.
9. THE FOLLOWING SPECIAL INSPECTIONS ARE IN ADDITION TO INSPECTIONS BY THE BUILDING OFFICIAL. THIS LIST IS NOT INTENDED TO BE ALL INCLUSIVE.

INSPECTION SCHEDULE

INSPECTION ITEMS	CODE REFERENCE	REMARKS	REQ'D
SOIL CONDITION	CBC Table 1705.6	SEE SOILS REPORT FOR COMPLIANCE	☐
CONCRETE WORK	CBC Table 1705.3		☐
SHOTCRETE WORK	CBC Table 1705.3		☐
REINFORCING STEEL	CBC Table 1705.2.2, 1705.3		☐
POST INSTALLED ANCHORS	CBC Table 1705.3	SEE ALSO ICC APPROVAL	☑
STRUCTURAL STEEL	CBC 1705.2		☐
STRUCTURAL STEEL WELDING	CBC 1705.2		☐
HIGH STRENGTH BOLTING	CBC 1705.2		☐
MASSONRY WORK	CBC 1705.4		☐
HIGH LOAD DIAPHRAGMS	CBC 1705.1		☐
STRUCTURAL WOOD	CBC 1705.10.1, 1705.11.2	SEE NOTE #8 ABOVE	☑
COLD FORMED STEEL	CBC 1705.10.2, 1705.11.3		☐
DRIVEN DEEP FOUNDATION ELEMENT	CBC Table 1705.7		☐
CAST IN PLACE DEEP FOUNDATION	CBC Table 1705.8		☐
EPOXY DOWELS	ESR 2508		☑

SHEET INDEX

S-00	GENERAL NOTES & REQUIREMENTS.
S-01	FOUNDATION & FIRST FLOOR PLAN
S-02	ROOF FRAMING PLAN
SD-1	STRUCTURAL DETAILS.
SD-2	STRUCTURAL DETAILS.

JIM GISH, INC.

DESIGN · BUILD

BASSETT

1372 Military Ave, Seaside, CA 93955, USA

Seal

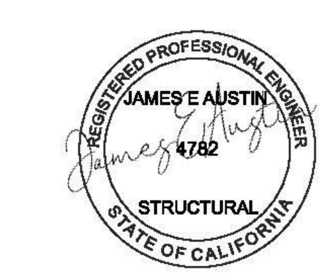

3/28/2025

TO THE BEST OF MY KNOWLEDGE, THE BUILDING DESIGN PLANS AND SPECIFICATIONS COMPLY WITH FLORIDA BUILDING CODE

NOT FOR CONSTRUCTION

date	submission / revision	no.

GENERAL NOTES & REQUIREMENTS

scale:	As indicated
drawn by:	SS
checked by:	Checker
date:	02.09.2025
project number:	Project Number

S-00

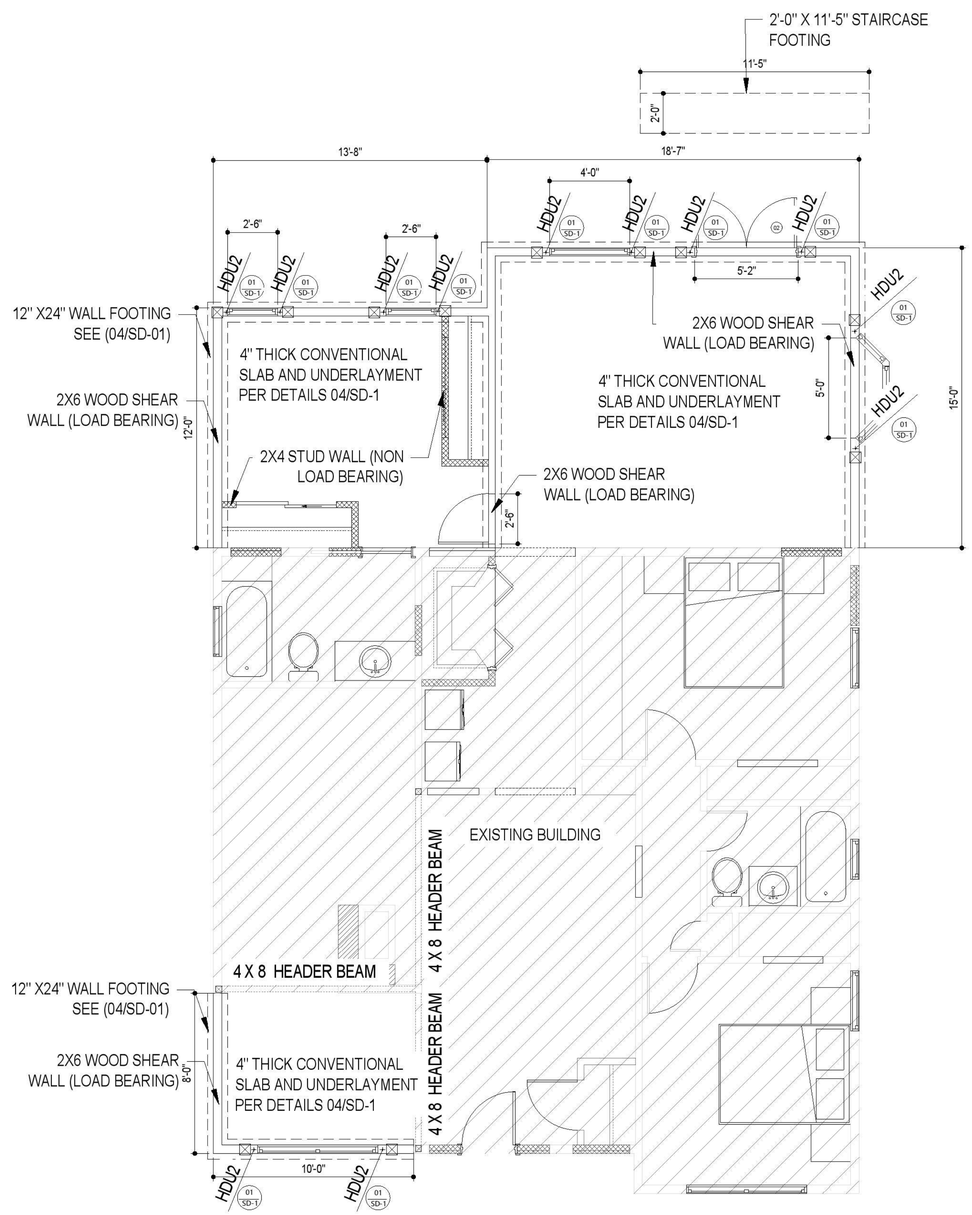

1
S01

FOUNDATION & FIRST FLOOR PLAN

Scale:1/16"=1'-0"

NOTE : ALL PROPOSED HEADDER SHOULD BE 4 X8 SPF BEAM

FOUNDATION NOTES

1. REFER TO S-00 SHEET FOR MORE INFORMATION.
2. FOR SHEAR PANEL TYPES 3, 4 & 5 ON BOTH SIDES OF WALL, USE MIN. 3X6 SILL PLATES U.N.O.
3. FOR NON-SHEAR WALLS, MASA/MASAP MUDSILL ANCHORS CAN BE USED IN LIEU OF ANCHOR BOLTS WITH END DISTANCE OF 4" MIN. PER ESR #2555.
4. TOP OF ALL EXTERIOR FOOTING, GRADE BEAM FOOTING, PAD FOOTING, OR FLAG POLE FOOTING TO BE MIN. 6" BELOW FINISH GRADE.
5. HOLD DOWN HARDWARE MUST BE SECURED IN PLACE PRIOR TO FOUNDATION INSPECTION
6. ALL HOLDOWNS AND POST ANCHORS TO BE INSTALLED ACCORDING TO MOST CURRENT SIMPSON STRONG TIE SPECIFICATIONS AND REQUIREMENTS OF ICC-ER REPORTS & SHALL BE TIED IN PLACE PRIOR TO FOUNDATION INSPECTION. DIMENSIONS ARE NOT FURNISHED TO SIMPSON HOLDOWNS. IT IS THE RESPONSIBILITY OF THE CONTRACTOR'S SUPERINTENDENT, THE FRAMING CONTRACTOR AND THE CONCRETE CONTRACTOR TO LOCATE THESE ANCHORS IN THE EXACT LOCATION. REFER TO DETAILS FOR PROPER INSTALLATION.
7. MIN. CONCRETE WIDTH TO BE 8" FOR RECEIVING PA, HPA & STHD'S. VERIFY LOCATIONS OF HOLDOWNS AND ANCHOR BOLTS WITH ROUGH FRAMING TO ASSURE ACCURATE INSTALLATION.
8. HOLDOWN CONNECTOR BOLTS INTO WOOD FRAMING REQUIRE 0.229"x3" PLATE WASHERS ON THE POST OPPOSITE THE HOLDOWN AND HOLDOWN SHALL BE TIGHTENED TO FINGER TIGHT PLUS ONE HALF WRENCH TURN JUST PRIOR TO COVERING THE WALL FRAMING.
9. FASTENERS FOR PRESERVATIVE-TREATED OR FIRE RETARDANT TREATED WOOD SHALL BE OF HOT DEPPED ZINC-COATED GALVANIZED STEEL IN ACCORDANCE WITH ASTM A 153. PER CRC R317.3.

SHEARWALL NOTES

1. REFER TO S-0 SHEET FOR MORE INFORMATION.
2. SHEAR WALLS CANNOT BE USED AS PLUMBING WALLS, UNLESS APPROVED BY E.O.R IN WRITING.
3. AT DOUBLE SIDED SHEAR WALLS, POST W/E.N. PER PLAN TO RECEIVE E.N. FROM BOTH SIDES.
4. WHEN MULTIPLE STUDS ARE USED INSTEAD OF A SINGLE POST, PLYWOOD SHEAR WALL TO BE NAILED TO ALL STUDS RECEIVING HOLDOWNS.
5. DO NOT BREAK SHEAR WALL AT PERPENDICULAR WALL LOCATIONS UNLESS SPECIFICALLY DETAILED ON PLANS. INSTALL SHEAR WALL PRIOR TO FRAMING OF PERPENDICULAR WALLS.
6. CONTRACTOR IS RESPONSIBLE FOR VERIFYING HARDY FRAMES MATCH TOP PLATE HEIGHT & NOTIFY ENGINEER OF RECORD IF DIFFERENT THAN PLANS.
7. ALL SHEAR PANELS SHALL HAVE CONTINUOUS SHEATHING MATERIAL FROM ONE END TO THE OTHER AND FROM PLATE TO PLATE AS SPECIFIED ON THE DRAWINGS. CONTRACTOR SHALL COORDINATE FRAMING SUCH THAT CONTINUITY OF SHEAR PANELS IS ASSURED.

SHEAR WALL SCHEDULE

2022 CALIFORNIA BUILDING CODE W/ 2020 L.A. COUNTY ORDINANCE

WALL TYPE	SHEATHING APA-RATED	BLK'G & STUD SIZE AT ADJ. PANEL EDGES	NAILING		SHEAR CLIPS (A35 OR LTP4)	SILL PLATE ATTACHMENT		ALLOWABLE SHEAR (PLF)
			EDGE (E.N.)	FIELD (F.N.)		FRAMED FLOOR	CONCRETE	
1	3/8" sheathing	2x	8d @ 4" O.C.	8d @ 12" O.C.	@ 24" O.C.	1/4"Øx6" SDS @ 16" O.C.	5/8" Ø A.B. @ 48" O.C.	200
2	15/32" Struc. I	2x	10d @ 6" O.C.	10d @ 12" O.C.	@ 16" O.C.	1/4"Øx6" SDS @ 12" O.C.	5/8" Ø A.B. @ 42" O.C.	340
3	15/32" Struc. I	3x	10d @ 4" O.C.	10d @ 12" O.C.	@ 8" O.C.	1/4"Øx6" SDS @ 8" O.C.	5/8" Ø A.B. @ 36" O.C.	510
4	15/32" Struc. I	3x	10d @ 3" O.C.	10d @ 12" O.C.	@ 8" O.C.	1/4"Øx6" SDS @ 6" O.C.	5/8" Ø A.B. @ 24" O.C.	665
5	15/32" Struc. I	3x	10d @ 2" O.C.	10d @ 12" O.C.	@ 6" O.C.	1/4"Øx6" SDS @ 5" O.C.	5/8" Ø A.B. @ 18" O.C.	870
3D	15/32" Struc. I BOTH SIDES	3x	10d @ 4" O.C.	10d @ 12" O.C.	@ 4" O.C.	1/4"Øx6" SDS @ 4" O.C.	5/8" Ø A.B. @ 18" O.C.	1020
4D	15/32" Struc. I BOTH SIDES	3x	10d @ 3" O.C.	10d @ 12" O.C.	@ 4" O.C.	1/4"Øx6" SDS @ 3" O.C.	5/8" Ø A.B. @ 12" O.C.	1330
5D	15/32" Struc. I BOTH SIDES	3x	10d @ 2" O.C.	10d @ 12" O.C.	@ 3" O.C.	1/4"Øx6" SDS @ 2.5" O.C.	5/8" Ø A.B. @ 9" O.C.	1740

NOTES:

(1) PROVIDE STAGGERED NAILING AT ALL PANEL EDGES. NAILS ARE MINIMUM 1/2" FROM PANEL EDGES & MINIMUM 3/8" FROM STUD EDGES.

(2) STUDS ARE SPACED @ 16" O.C. MAX., UNO.

(3) COMMON NAILS MUST BE USED WITH NO SUBSITUTION.

JIM GISH, INC.

JG DESIGN • BUILD

BASSETT

1372 Military Ave, Seaside, CA 93955, USA

Seal

REGISTERED PROFESSIONAL ENGINEER JAMES E AUSTIN 4782 STRUCTURAL STATE OF CALIFORNIA

3/28/2025

TO THE BEST OF MY KNOWLEDGE, THE BUILDING DESIGN PLANS AND SPECIFICATIONS COMPLY WITH FLORIDA BUILDING CODE

NOT FOR CONSTRUCTION

date	submission / revision	no.

FOUNDATION & FIRST FLOOR PLAN

scale:	As indicated
drawn by:	SS
checked by:	Checker
date:	02.09.2025
project number:	Project Number

S-01

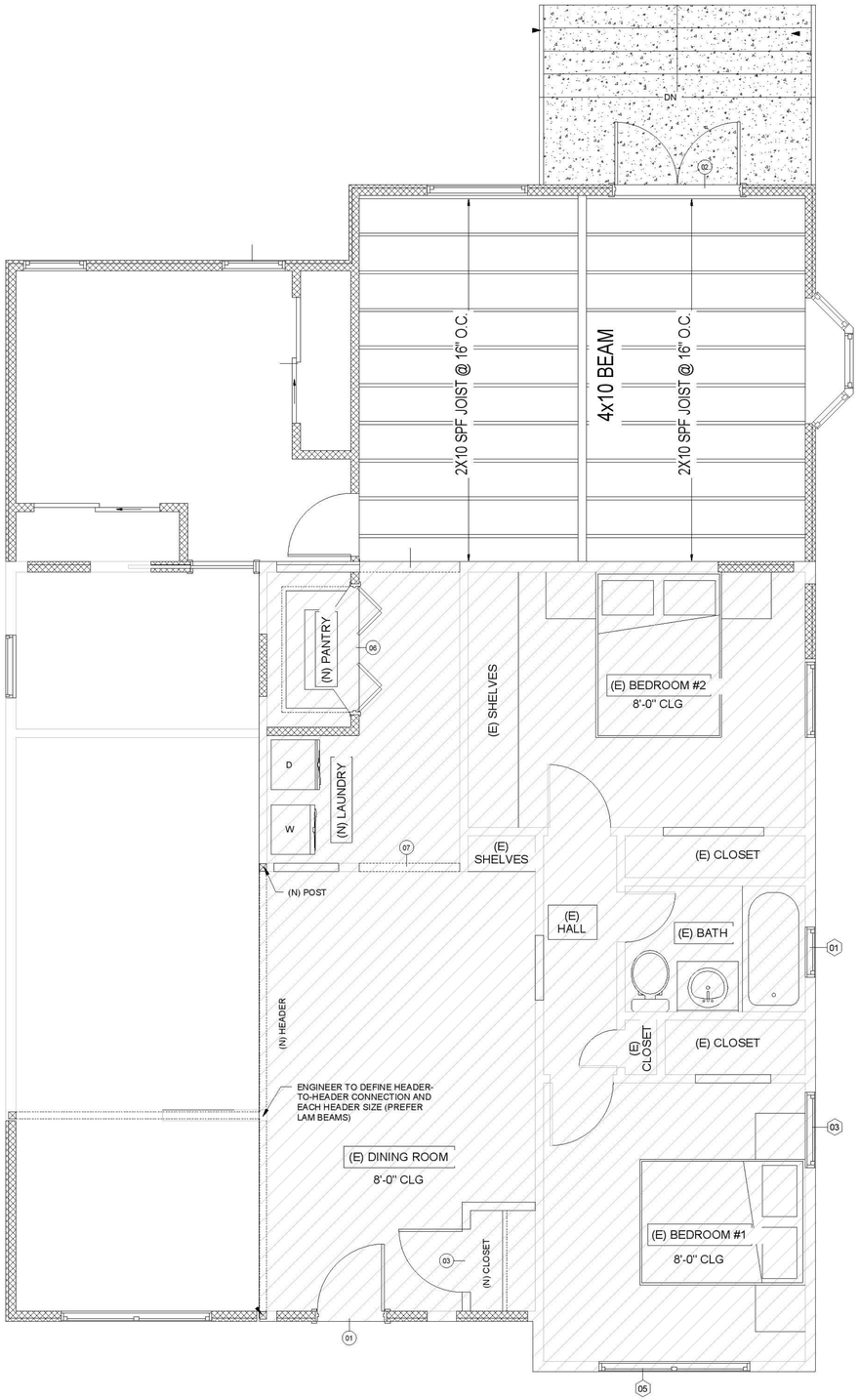

1
S02

CEILING FRAMING PLAN

Scale:1/16"=1'-0"

Dropsemailsetup/C4-addition onWbasett_R21_2020\C4-1-forstatesqcd-16-24x36x1903940.jpg

JIM GISH, INC.

JG
DESIGN • BUILD

BASSETT

1372 Military Ave, Seaside, CA 93955, USA

Seal

REGISTERED PROFESSIONAL ENGINEER
JAMES E AUSTIN
4782
STRUCTURAL
STATE OF CALIFORNIA

3/28/2025

TO THE BEST OF MY KNOWLEDGE, THE BUILDING DESIGN PLANS AND SPECIFICATIONS COMPLY WITH FLORIDA BUILDING CODE

NOT FOR CONSTRUCTION

date	submission / revision	no.

CEILING PLAN

scale:	As indicated
drawn by:	SS
checked by:	Checker
date:	02.09.2025
project number:	Project Number

S-02

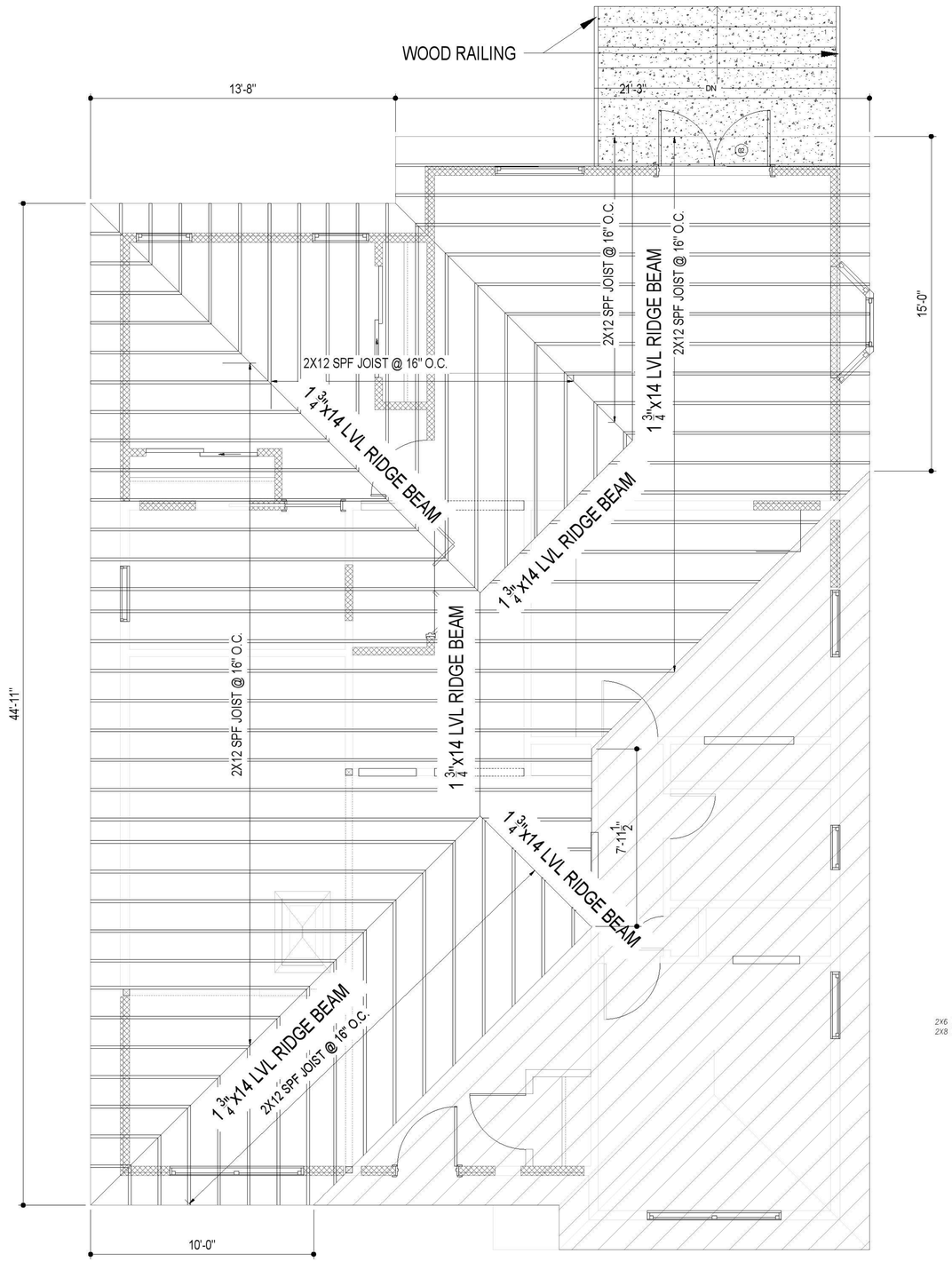

1 S03 ROOF FRAMING PLAN

Scale:1/16"=1'-0"

FRAMING NOTES

1. REFER TO S-0 SHEET FOR MORE INFORMATION.
2. USP CONNECTORS CAN BE USED IN LIEU OF SIMPSON STRONG TIE IN THIS PROJECT. CONTACT E.O.R. FOR CONVERSION TABLE OR SUBMIT SHOP DRAWINGS TO E.O.R. FOR REVIEW AND APPROVAL.
3. USE 2x TRIMMER FOR HEADERS LESS THAN 6'-0" AND 2-2x TRIMMER FOR 6'-0" TO 10'-0" LONG SPAN IN BEARING WALLS, U.N.O. ON THE PLAN. SEE PLANS FOR HEADERS LARGER THAN 10'-0" LONG.
4. TYPICAL HEADERS: USE 4x4 FOR OPENINGS LESS THAN 16" AT BEARING WALLS WITHOUT POINT LOADS. FOR NON-BEARING WALLS USE 2x4 FOR OPENINGS UP TO 3'-0" MAX. USE 2-2x4 FOR OPENINGS UP TO 6'-0" MAX. USE 4x6 FOR OPENINGS UP TO 12'-0" MAX. U.N.O.
5. ALL LEDGERS SHOULD BE SPLICED WITH ST22 STRAP, U.N.O.
6. ROOF WALL TOP PLATE SHOULD BE SPLICED PER DETAIL 3B/SD.2 U.N.O. ON PLANS.

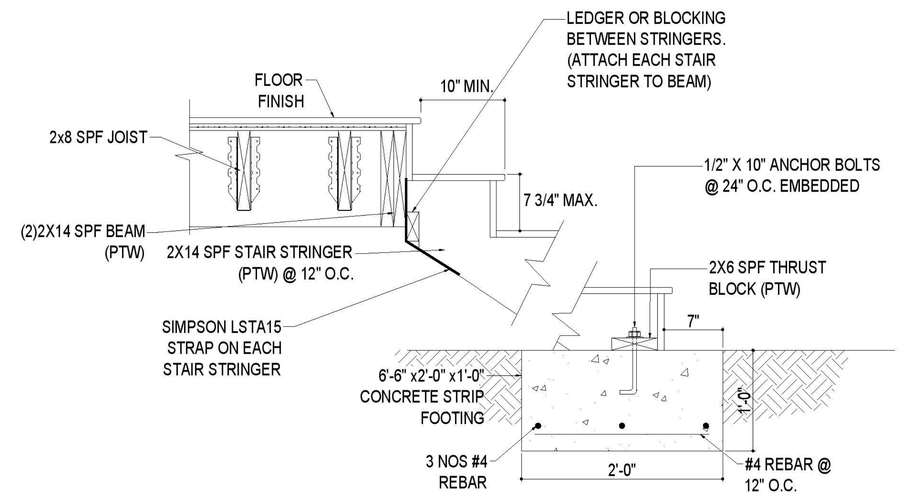

02 S02 TYPICAL STAIR DETAIL

Scale: 1 1/2"=1'-0"

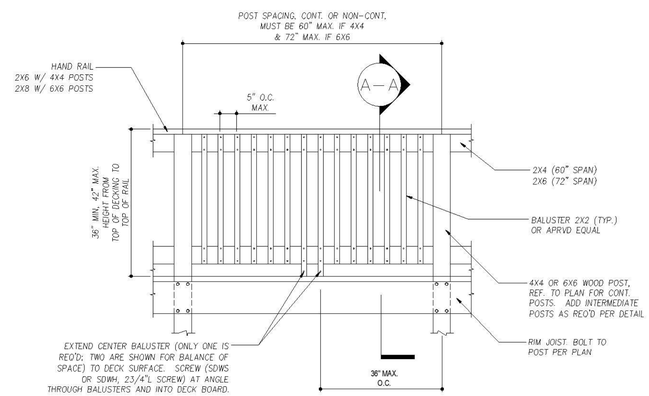

WOOD RAILING & BALUSTER DETAILS

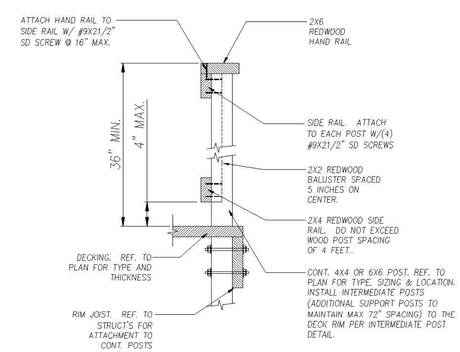

WOOD RAILING SECTION A—A

(352) 405 - 6051

Ocala, Florida, 34471

JIM GISH, INC.

JG DESIGN • BUILD

BASSETT

1372 Military Ave, Seaside, CA 93955, USA

Seal

REGISTERED PROFESSIONAL ENGINEER JAMES E AUSTIN 4782 STRUCTURAL STATE OF CALIFORNIA

3/28/2025

TO THE BEST OF MY KNOWLEDGE, THE BUILDING DESIGN PLANS AND SPECIFICATIONS COMPLY WITH FLORIDA BUILDING CODE

NOT FOR CONSTRUCTION

date	submission / revision	no.

ROOF FRAMING PLAN

scale:	As indicated
drawn by:	SS
checked by:	Checker
date:	02.09.2025
project number:	Project Number

S-03

HDU BOLT Ø EMBED.		E.D.	CAPACITY	MIN PAD
HDU2	0'-0 5/8"	0'-6"	0'-1 7/8"	3075#	-
HDU5	0'-0 5/8"	0'-8 1/4"	0'-1 7/8"	5645#	-
HDU8	0'-0 7/8"	0'-9"	1'-1 1/2"	7870#	24" SQ x 12" DEEP
HDU11	0'-1"	0'-11"	1'-4 1/2"	11175#	36" SQ x 18" DEEP

ICC-ESR #2330 FOR SIMPSON HOLDOWN

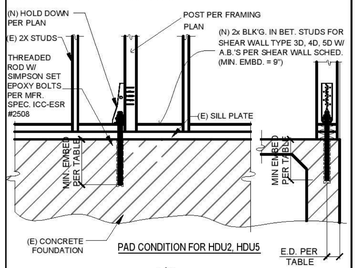

PAD CONDITION FOR HDU2, HDU5

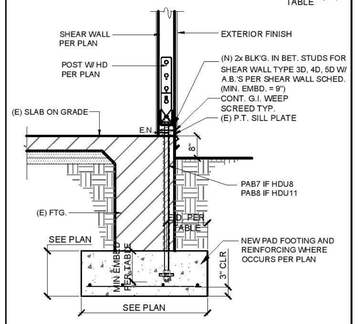

PAD CONDITION FOR HDU8, HDU11

01

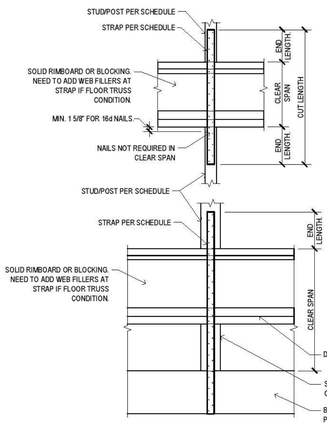

MARK	STRAP TYPE	MIN STUD/POST	NO. OF NAILS @ EA. END LENGTH	END LENGTH	CAPACITY (LB)
A	(1)CS16	2X4	(11)16d BOX/SINKER	13"	1705
B	(2)CS16	(2)2X4	(22)16d BOX/SINKER	13"	3410
C	(2)CS14	(2)2X4	(30)16d BOX/SINKER	18"	4680
C	(3)CS14	4X6	(45)16d BOX/SINKER	18"	7470
D	CMST14	4X4	(40)16d BOX/SINKER	38"	6475
E	CMST12	4X6	(52)16d BOX/SINKER	48"	9215
F	(2)CMST14	4X8	(80)16d BOX/SINKER	38"	12950
G	(2)CMST12	6X8	(104)16d BOX/SINKER	48"	18430

CMST14 & CMST12 ARE ONLY APPLICABLE AT POST TO POST CONNECTION.

02 HOLDOWN DETAIL

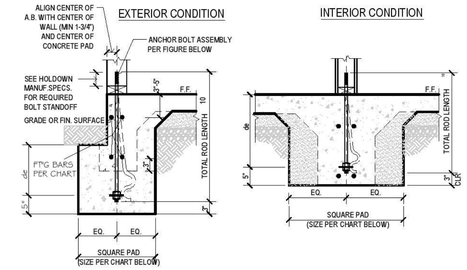

SIMPSON HOLDOWN TYPE	ALL-THREAD ROD ANCHOR BOLT ASTM F1554 GR.36,Fy= 36 ksi,Fu= 58 ksi				ALT. SSTB ANCHOR		FOOTING BARS	
	ROD DIAMETER	PLATE WASHER F436	ROD EMBEDMENT de	SQUARE PAD SIZE	TYPE	EMBEDMENT de	MIN BARS	BARS LENGTH PAST EA SIDE OF ROD/BOLT
HDU2	5/8"	1.75"x1.75"x1/2"	7"	20"	PAB5	SSTB24	20 5/8"	(1) #4-T&B	2'-0"
HDU4	5/8"	1.75"x1.75"x1/2"	7"	20"	PAB5	SSTB24	20 5/8"	(2) #4-T&B	2'-0"
HDU5	5/8"	1.75"x1.75"x1/2"	7"	20"	PAB5	SSTB24	20 5/8"	(2) #4-T&B	2'-0"
HDU8	7/8"	2.5"x2.5"x1/2"	11"	30"	PAB7	SSTB28	24 7/8"	(3) #4-T&B	3'-0"
HDU8	7/8"	2.5"x2.5"x1/2"	11"	30"	PAB7	SSTB28	24 7/8"	(3) #4-T&B	3'-0"
HDU11	1"	3"x3"x5/8"	13"	36"	PAB8	N/A	N/A	(2) #5-T&B	3'-0"
HDU14	1"	3"x3"x5/8"	13"	36"	PAB8	N/A	N/A	(2) #5-T&B	3'-0"
HD19	1-1/4"	3.5"x3.5"x3/4"	16"	48"	PAB10	N/A	N/A	(3) #5-T&B	4'-0"

SIMPSON PRODUCT TYPE	PRODUCT RESEARCH REPORT		
	ICC-ES REPORT	LARR REPORT	IAPMO REPORT
HDU	ESR- 2330	RR - 25720	N/A
HDQ	ESR- 2330	RR - 25720	N/A
HD	N/A	RR - 25828	ER- 143
SSTB	ESR- 2611	RR - 25827	N/A

NOTES:
1. BOLTS SHALL BE TIED IN PLACE PRIOR TO FOUNDATION POUR, U.N.O.
2. COMPLY WITH THE MANUFACTURER'S MOST CURRENT LITERATURE,SPECIFICATIONS, AND ICC-ESRULARR REPORT
3. POST TENSION CABLE MAY NOT BE COUNTER AS REQUIRED HOLDOWN REBAR
4. EXISTING FOOTING REBAR(S) MAY BE COUNTED AS REQUIRED HOLDOWN RABAR(S)
5. CONCRETE COMPRESSIVE STRENGTH MUST NOT BE LESS THAN 2,500 psi
6. HOLDOWNS MAY BE RAISED OFF MUD-SILL TO ACCOMMODATE AN ANCHOR MIS-LOCATED NO MORE THAN 1 $\frac{1}{2}$". HOLDOWN SHALL BE RAISED OFF SILL AT LEAST 3" FOR EVERY 1/4" THAT ANCHOR IS OFFSET FROM MODEL'S CENTERLINE (MAX. 18") BOLT SLOPE SHALL BE NO GREATER THAN 1:12 (5%).REFER TO MANUF.SPECS.
7. LOADS ARE BASED ON :DOUG- FIR(DF),CRACKED CONCETE,SDC D AND e 6" CURB, 12" (BELOW GRADE) x 12 $\frac{1}{2}$" (WIDE) MONOLITHIC(1-POUR) FTG.
8. de IS MEASURE TO TOP OF WASHER PLATE PER MANUF.SPECIFICATIONS.
9. CALCULATED TOTAL BAR LENGTH IS THE RESPONSIBILITY OF THE CONTRACTOR WHO MUST TAKE INTO CONSIDERATION ALL ASPECTS OF THE PLANS AND HIS CONSTRUCTION TECHNIQUES.
10. LARGER DIMENSION AND/OR THICKNESS WASHERS MAY BE USED BASED UPON COST OR AVAILABILITY. MULTIPLE WASHERS SHALL NOT BE USED TO ACCOMPLISH TOTAL REQUIRED THICKNESS.
11. STANDARD CUT WASHERS IS REQUIRED UNDER ANCHOR NUT AND BETWEEN NUTS AND WOOD.
12. AT CORNER CONDITION, INSTALLED IN AN ANGLE PER MANUFACTURER'S, RECOMMENDATION. ICC-ESR-2611

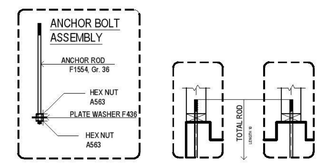

03 CAST-IN-PLACE FOUNDATION HOLDOWNS (THIN-SLAB CONDITION) - MONOLITHIC (1-POUR)

FOOTING SIZE		
NO. OF STORES	WIDTH (IN)	DEPTH (IN)
1	12"	24"
2	15"	24"
3	18"	24"

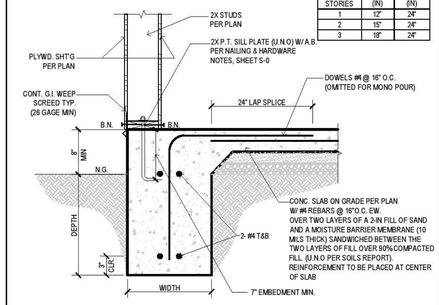

04 TYPICAL EXTERIOR FOOTING

INSERTION SCALE: 1/12

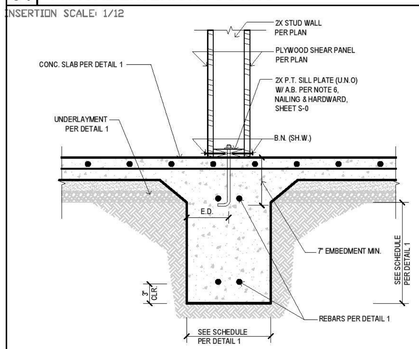

05 INTERIOR BEARING FOOTING

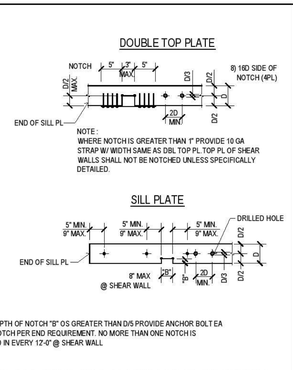

06 PLATE NOTCH AT NON SHEARWALL

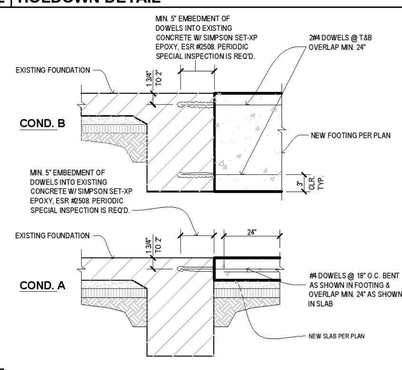

07 ADDITION OF FTN'G./SLAB AT EXISTING FOUNDATION

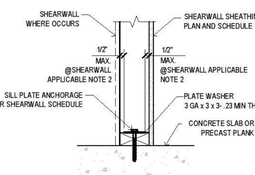

NOTES:
1. INSTALL SILL PLATE ANCHORAGE AS SHOWN AND AT SPACING INDICATED IN WOOD SHEARWALL BASE CONNECTION SCHEDULE.
2. STAGGER ANCHORS AT DOUBLE SIDE SHEARWALL

08 WOOD SHEARWALL SILL PLATE ANCHORAGE

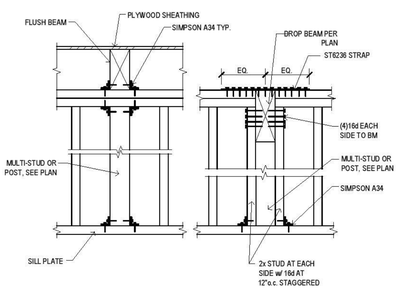

09 BEAM TO WALL DETAIL

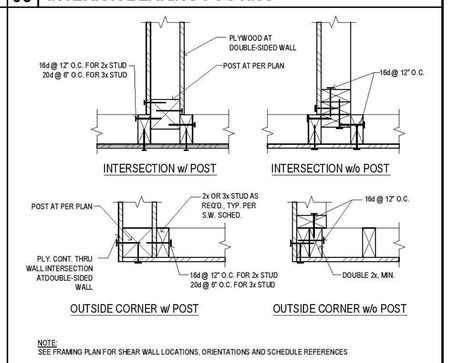

NOTE:
SEE FRAMING PLAN FOR SHEAR WALL LOCATIONS, ORIENTATIONS AND SCHEDULE REFERENCES

10 SHEARWALL @ INTERSECTION

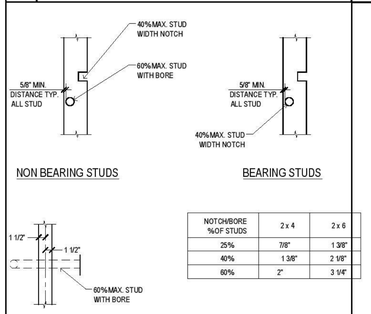

NOTCH/BORE %OF STUDS	2 x 4	2 x 6
25%	7/8"	1 3/8"
40%	1 3/8"	2 1/8"
60%	2"	3 1/4"

NOTES:
1. NOTCHING AND BORING SHOULD NOT OCCUR IN SAME STUD SECTION
2. NO MORE THAN TWO SUCCESSIVE DOUBLE STUDS MAY HAVE 60%MAX BORING HOLES

11 STUD NOTCHING/BORING LIMITS

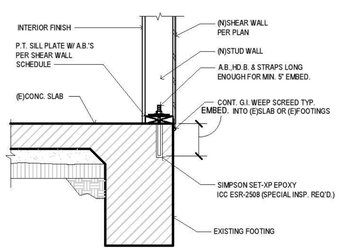

12 MISSING SHEAR ANCHOR DETAIL

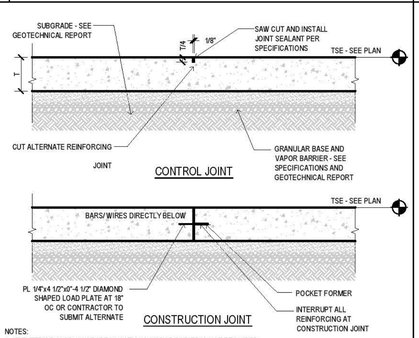

NOTES:
1. AT EXTERIOR SLAB ON GRADE LOACTIONS, VAPOR BARRIER IS NOT REQUIRED
2. PROVIDE DIAMOND SHAPED LOAD PLATE COMPLIANT WITH ACI 302.1 R

13 TYPICAL SLAB ON GRADE CONSTRUCTION

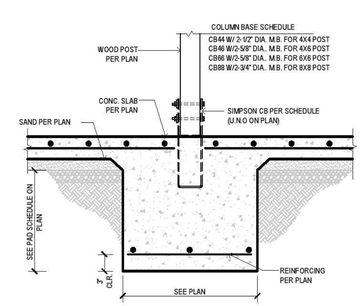

14 INTERIOR ISOLATE PAD FOOTING

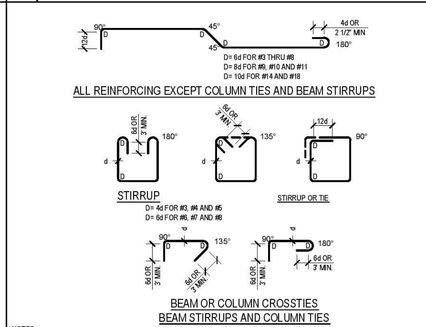

NOTES:
TIES AND CROSSTIES FOR SHEARWALL BOUNDARY ELEMENTS SHALL BE DETAILED AS COLUMN TIES/CROSSTIES

15 STANDARD HOOKS AND BENDS

JIM GISH, INC.

JG DESIGN • BUILD

BASSETT

1372 Military Ave, Seaside, CA 93955, USA

Seal

REGISTERED PROFESSIONAL ENGINEER JAMES E AUSTIN 4782 STRUCTURAL STATE OF CALIFORNIA

3/28/2025

TO THE BEST OF MY KNOWLEDGE, THE BUILDING DESIGN PLANS AND SPECIFICATIONS COMPLY WITH FLO RIDA BUILDING CODE

NOT FOR CONSTRUCTION

date	submission / revision	no.

TYPICAL DETAILS

scale:	As indicated
drawn by:	SS
checked by:	Checker
date:	02.09.2025
project number:	Project Number

SD-01

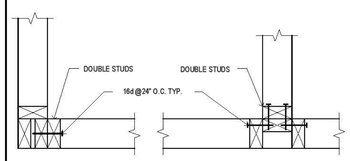

16 WALL INTERSECTION

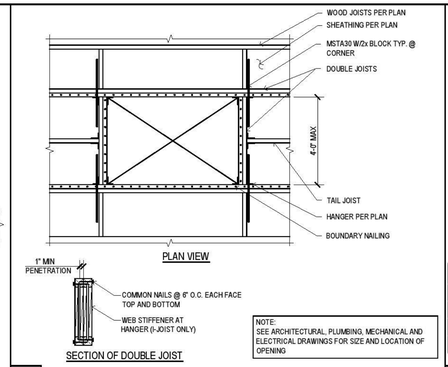

NOTE:
SEE ARCHITECTURAL, PLUMBING, MECHANICAL AND ELECTRICAL DRAWINGS FOR SIZE AND LOCATION OF OPENING

17 TYPICAL DIAPHRAGM OPENING

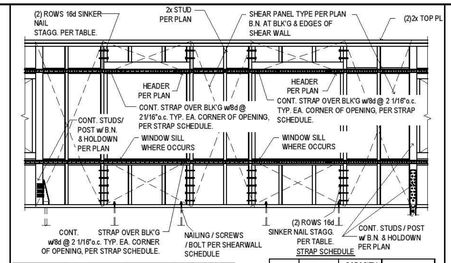

PANEL TYPES	NAIL SPACING	PANEL TYPES	NAIL SPACING
1	@ 12" O.C.	3D	@ 4" O.C.
2	@ 9" O.C.	4D	@ 3" O.C.
3	@ 6" O.C.	5D	@ 2 1/2" O.C.
4	@ 5" O.C.		

STRAP SCHEDULE

MARK	STRAP	CAPACITY (LB)	BLOCKING
A	CS16	1705	2x
B	2-CS16	3410	2-2x
C	2-CS14	4980	2-2x

NOTES:
1. 1/8" GAP AT PANEL EDGE
2. USE FULL WIDTH BLK'G. & WINDOW SILL FOR STRAP (S) ON BOTH SIDES OF (2) SIDED SHEAR PANELS.
3. SEE PLAN FOR NUMBER OF OPENING WITH FORCE TRANSFER AROUND

18 SHEAR WALL WITH OPENING

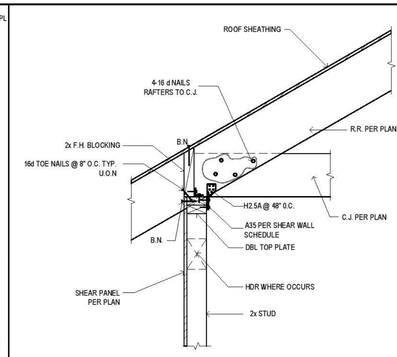

19 SHEAR TRANSFER

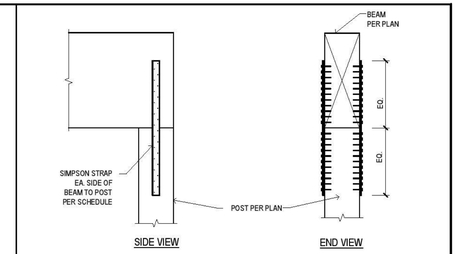

STRAP SCHEDULE

MARK	STRAP EACH SIDE	OVERALL LENGTH	CAPACITY (LB)
A	MSTA12	12"	940
B	(1) CS16	26"	3410
C	(2) CS16	26"	6820
D	(1) CMSTC16	40"	9380
E	(2) CMSTC16	40"	18760

- REFER TO SIMPSON SPEC. FOR STRAP NAILING
- NAIL TO ALL STRAP HOLES

20 POST & BEAM CONNECTION

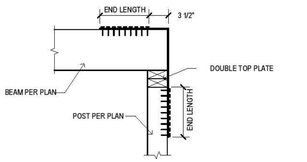

MARK	STRAP TYPE	NAIL AND SPACING		CAPACITY (LB)
		TO SAWN LUMBER	TO LVL/PSL/GLB	
A	(1) CS16 ON 2x4	8d @ 2 1/6"	8d @ 4 1/6"	1705
B (2)	CS16 ON 2-2x4	8d @ 2 1/6"	8d @ 4 1/6"	2666
C	(3) CS16 ON 4x6	8d @ 2 1/6"	8d @ 4 1/6"	5115

END LENGTH = 15" IF SAWN LUMBER
= 30" IF LVL/PSL/GLB

21 BEAM HOLDOWN DETAIL

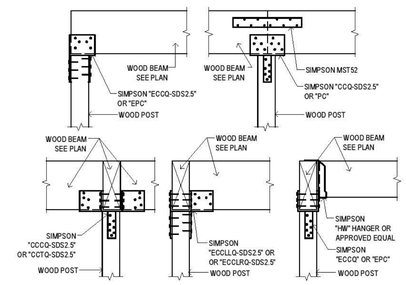

NOTES:
1. NO STRAP FOR CONTINUOUS BEAM CONDITION
2. ALIGN BEAMS TO RECEIVE STRAP

22 CONNECTION DETAIL

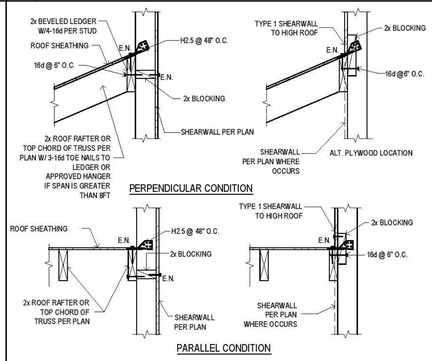

23 ROOF TO WALL

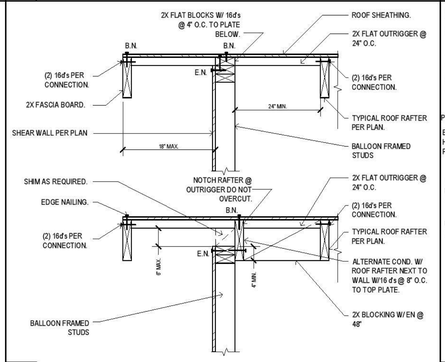

24 SHEAR TRANSFER

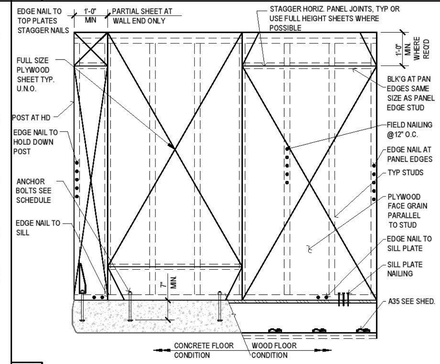

25 TYPICAL SHEARWALL FRAMING ELEVATION

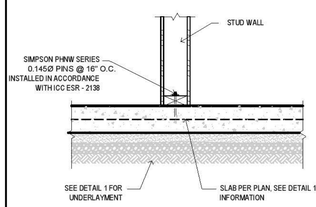

26 NON - BEARING INTERIOR WALL

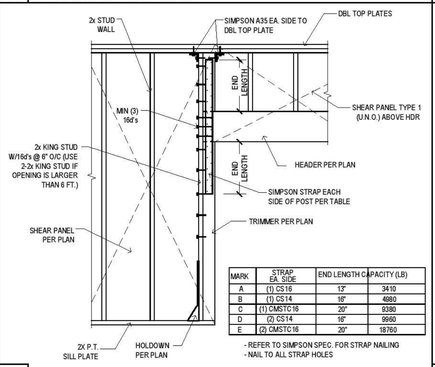

MARK	STRAP EA. SIDE	END LENGTH	CAPACITY (LB)
A	(1) CS16	13"	3410
B	(1) CS14	16"	4980
C	(1) CMSTC16	20"	9380
D	(2) CS14	16"	9960
E	(2) CMSTC16	20"	18760

- REFER TO SIMPSON SPEC. FOR STRAP NAILING
- NAIL TO ALL STRAP HOLES

27 CONNECTION DETAIL

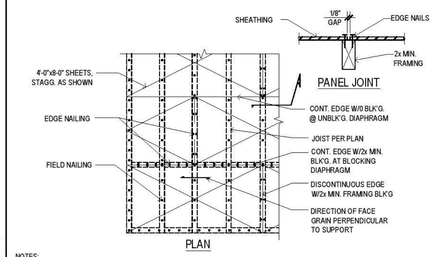

NOTES:
1) NAILS SHALL BE DRIVEN TIGHT BUT SHALL NOT FRACTURE SURFACE OF SHEATHING.
2) PLYWOOD OSB PIECES SHALL CONTAIN NOT LESS THAN 8 SQ. FT. NOR BE LESS THAN 2-0" WIDE.
3) MAXIMUM UNSUPPORTED SHEATHING TO BE 24".
4) FRAMING AT ADJOINING PANEL EDGE SHALL BE 3" NOMINAL OR WIDER AND NAILS AT ALL PANEL EDGES SHALL BE STAGG. WHERE PANEL EDGE NAILING IS SPECIFIED AT 2 1/2" O.C. OR LESS
5) ALL PANEL EDGES OF THE FLOOR SHEATHING SHALL HAVE APPROVED T AND G JOINTS OR SHALL BE SUPPORTED BY BLK'G. PER IBC TABLE 2304.7 (3) FOOTNOTE D.

28 ROOF OR FLOOR SHEATHING LAYOUT

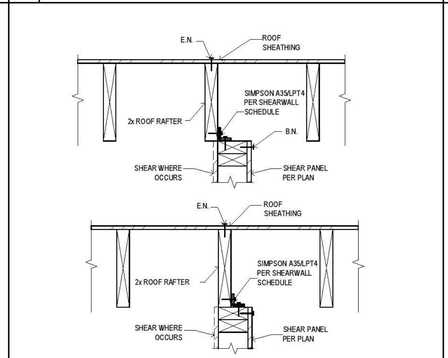

29 SHEAR TRANSFER

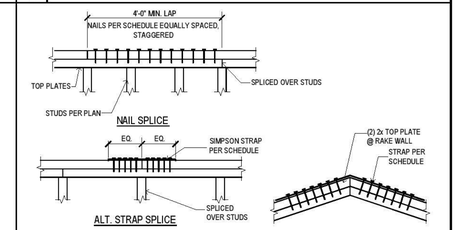

MARK	NAIL SPLICE		ALT. STRAP SPLICE
	NO. OF NAILS	MIN. LAP (FT)	
A	10	4	ST22
B	16	4	ST6224
C	22	6	ST6236
D	24	6	MST37
E	32	8	MST48
F	36	8	MST60
G	42	8	CMST12-72"

ALL NAILS ARE 16d SINKER OR 10d COMMON

30 TYPICAL SPLICE TOP PLATE

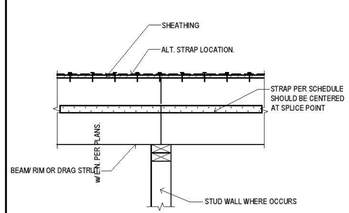

MARK	STRAP	NAIL SIZE & QUANTITIES	CAPACITY (LB)
A	CS16x52"	(2) ROWS 8d @ 4 1/8"	1705
B	ST6236	(40) 16d SINKER	3845
C	MST48	(50) 16d SINKER	5310
D	MST60	(68) 16d SINKER	6730

31 DRAG DETAIL

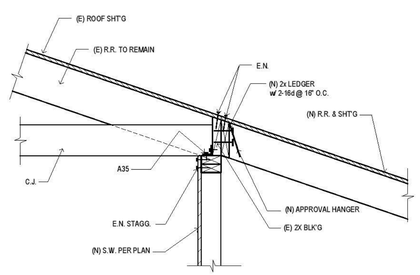

32 SHEAR TRANSFER

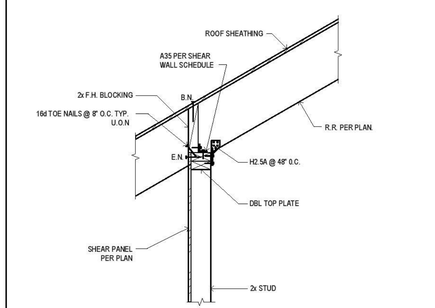

33 SHEAR TRANSFER

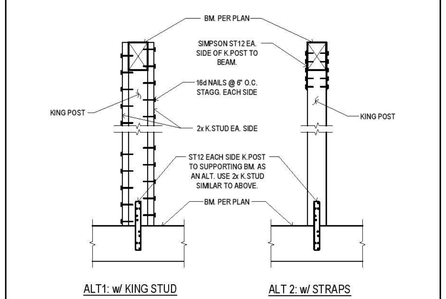

34 KING POST CONNECTION

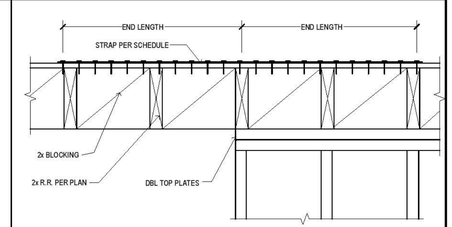

STRAP SCHEDULE

MARK	STRAP	END LENGTH	NAIL SIZE & SPACING	CAPACITY (LB)
A	CS16	26"	(2) ROWS 8d @ 4 1/6"	1705
B	(2) CS16	26"	(2) ROWS 8d @ 4 1/6"	3410

- USE DBL BLK'G OR FLAT BLOCKS FOR CONDITION B.

35 DRAG DETAIL

JIM GISH, INC.

JG DESIGN • BUILD

BASSETT

1372 Military Ave, Seaside, CA 93955, USA

Seal

REGISTERED PROFESSIONAL ENGINEER
JAMES E AUSTIN
4782
STRUCTURAL
STATE OF CALIFORNIA

3/28/2025

TO THE BEST OF MY KNOWLEDGE, THE BUILDING DESIGN PLANS AND SPECIFICATIONS COMPLY WITH FLORIDA BUILDING CODE

NOT FOR CONSTRUCTION

date	submission / revision	no.

TYPICAL DETAILS

scale:	As indicated
drawn by:	SS
checked by:	Checker
date:	02.09.2025
project number:	Project Number

SD-02

GENERAL ELECTRICAL NOTES

S.N.	DESCRIPTION
1	GENERAL CONTRACTOR SHALL VERIFY FIELD CONDITIONS BEFORE SUBMITTING BID.
2	
3	GENERAL CONTRACTOR SHALL OBTAIN AND PAY FOR BOTH ROUGH AND FINAL UNDER-WRITERS OR OTHER APPROVED INSPECTION AGENCY CERTIFICATES "ELECTRICAL INSPECTION". THESE CERTIFICATES SHALL BE PRESENTED WITH REQUEST FOR FINAL PAYMENT.
4	IT IS THE INTENT OF THESE PLANS TO PROVIDE A COMPLETE OPERATING ELECTRICAL SYSTEM. THIS CONTRACTOR SHALL FURNISH AND INSTALL ALL WIRING, EQUIPMENT, MATERIAL, ETC. REQUIRED, EXCEPT WHERE SPECIFICALLY NOTED AS BEING FURNISHED BY OTHERS. SHOULD THERE BE ANY QUESTIONS CONCERNING RESPONSIBILITY, THEY SHALL BE ADDRESSED TO ARCHITECT PRIOR TO BID. NO EXTRA CHARGES WILL BE ALLOWED.
5	ELECTRICAL SERVICE SHALL BE COORDINATED WITH THE EXISTING FIELD CONDITIONS.
6	CONTRACTOR SHALL MAKE ALL FINAL CONNECTIONS TO ALL CONTROLS, OWNER-SUPPLIED EQUIPMENT, MECHANICAL AND PLUMBING EQUIPMENT AS REQUIRED.
7	REFER TO ARCH. DRAWINGS FOR ELEVATION DETAILS. ALL FIXTURE AND DEVICE LOCATIONS SHOWN ON ARCH.L DRAWINGS SUPERSEDE THOSE SHOWN ON ELECTRICAL PLANS.
8	CIRCUIT NUMBER ON THE DRAWINGS ARE FOR IDENTIFICATION ONLY AND DO NOT INDICATE THE POSITION ON THE PANEL BOARD. CONNECT THE CIRCUITS WITH THE LIGHTEST LOADS AND THE RECEPTACLE CIRCUITS NEAR THE TOP OF THE PANEL, AND THE MORE HEAVILY LOADED CIRCUITS NEAR THE BOTTOM. BALANCE ALL CIRCUITS EVENLY BETWEEN PHASE SO THAT FEEDER WIRES CARRY APPROXIMATELY EQUAL CURRENT. ALL PHASES MUST BE BALANCED WITHIN 10% OR LESS. G.C. SHALL REBALANCE IF NECESSARY.
9	BRANCH CIRCUIT CONDUCTOR INSULATION SHALL BE COLOR CODED, TYPE THHN/THWN.
10	CABLES IN HIGH TEMPERATURE AREAS SHALL HAVE INSULATION TYPE SUITABLE FOR THE TEMPERATURE. CABLES USED IN SPACES FOR ENVIRONMENTAL AIR SHALL CONFORM WITH APPLICABLE NMEC REQUIREMENTS.
11	ALL WIRING USED IN RETURN OR DISCHARGE AIR PLENUMS SHALL BE PLENUM RATED OR INSTALLED PER METHODS APPROVED BY NMEC
12	ALL WIRE AND CABLE CONDUCTORS SHALL BE COPPER WITH INSULATION RATED 600V. CONDUCTORS SIZED #10 AWG AND SMALLER SHALL BE SOLID OD STRANDED, AND CONDUCTORS SIZED LARGER THAN #10 AWG SHALL BE STRANDED WIRE.
13	BRANCH CIRCUITS FOR POWER AND LIGHTING SHALL NOT BE LESS THAN #12 AWG. OR AS NOTED. WIRES ARE TO BE SIZED FOR THE APPROPRIATE VOLTAGE DROPS. SEE WIRE SIZE SCHEDULE ON THIS SHEET.
14	ALL DATA CABLES SHALL BE CAT6, PLENUM RATED. TO BE PROVIDED BY OWNER SELECTED VENDOR. ELECTRICAL WORK SHALL BE TO PROVIDE OUTLET BOXES AND "RING AND STRING" FOR PULLING OF CABLES IN CONCEALED SPACES.
15	CONTROL WIRING SHALL NOT BE LESS THAN #14 AWG UNLESS OTHERWISE NOTED.
16	HOME-RUNS SHOWN ARE SCHEMATIC. G.C. MAY ORIGINATE HOMERUNS FROM DIFFERENT LOCATIONS. ALL WIRE INCLUDING HOME-RUNS SHALL BE DELINEATED ON AS-BUILT DWGs.
17	ALL WIRING INSTALLED UNDER THIS CONTRACT SHALL BE TESTED FOR PROPER CONNECTIONS AND SHORT CIRCUITS PRIOR TO THE TURNING OVER OF WORK AS A COMPLETE UNIT.
18	PROVIDE ALL ELECTRICAL SYSTEM GROUNDING IN ACCORDANCE WITH CEC. REQUIREMENTS EVEN IF IT IS NOT SHOWN ON THE DRAWINGS. INCLUDE ADDITIONAL GROUNDING CONDUCTORS IN ALL RACEWAYS EVEN THOUGH THE DRAWINGS SHOW ONLY CIRCUIT AND/OR NEUTRALS CONDUCTORS. THE PLUMBING AND PIPING SYSTEM SHALL NOT BE USED AS A GROUND. ALL TRANSFORMER NEUTRALS SHALL BE GROUNDED TO BUILDING STEEL IN ACCORDANCE WITH CEC.
19	ALL CONDUITS PASSING THROUGH PARTITIONS ARE TO BE APPROPRIATELY SLEEVED AND SEALED.
20	FURNISH AND INSTALL ALL CONDUIT WITH PULL WIRES AS REQUIRED. OUTLET BOXES SHALL BE STEEL, EXTRA DEEP WITH GRND PIGTAILS. GRND PUSH-CLIPS ARE NOT ACCEPTABLE.
21	ALL PENETRATIONS SHALL BE INSTALLED AND SEALED PER NATIONAL STATE AND LOCAL CODES
22	DO NOT MAKE ANY CHANGES OR SUBSTITUTIONS WITHOUT SPECIFIC WRITTEN APPROVAL FROM THE ARCHITECT OR ENGINEER.
23	GUARANTEE ALL WORK, MATERIAL AND EQUIPMENT FOR A PERIOD OF ONE YEAR FROM THE DATE OF APPROVAL AND FINAL ACCEPTANCE.
24	THIS DESIGN IS BASED ON INITIAL DESIGN DATA. GENERAL CONTRACTOR TO SUPPLY AND INSTALL FEEDERS, FUSES AND CIRCUIT BREAKERS TO MATCH THE NAMEPLATE RATING OF ALL EQUIPMENT. THIS SHALL BE INCLUDED IN THE INITIAL BID PROPOSAL AND NO EXTRAS SHALL BE ENTERTAINED.
25	LABEL ALL JUNCTION BOXES, OUTLETS, LIGHT SWITCH, ETC. WITH CIRCUIT NUMBER ON INTERIOR ON COVER PLATE. USE SELF-ADHESIVE LABEL, 1/8" LETTERS SIZE.
26	GENERAL CONTRACTOR SHALL PROVIDE SEISMIC RESTRAINTS AND SUPPORTS FOR ALL FLOOR, WALL, AND CEILING MOUNTED ELECTRICAL EQUIPMENT TO RESIST EARTHQUAKE EFFECTS DETERMINED IN ACCORDANCE WITH THE BUILDING CODE.
27	THE G.C. SHALL PROVIDE ALL EQUIPMENT. MATERIALS AND LABOR TO COMPLETE ALL ELECTRICAL WORK IN A NEAT AND WORKMANLIKE MANNER AND IN ACCORDANCE WITH GOOD COMMERCIAL PRACTICE INCLUDING THE INSTALLATION OF ALL THE EQUIPMENT MATERIALS AND SYSTEMS AND THE FINAL CONNECTIONS TO THE OWNER'S EQUIPMENT AND FIXTURES AS REQUIRED BY THE OWNER. THE G. C. SHALL ALSO FURNISH TEMPORARY WIRING AND LIGHTING TO PROVIDE A MINIMUM OF 25 F.C IN WORK AREAS FOR USE OF ALL THE TRADES DURING CONSTRUCTION AND THE INSTALLATION OF THE OWNERS FIXTURES. THE G.C. IS RESPONSIBLE TO REMOVE ALL TEMPORARY WIRING UPON COMPLETION OF CONSTRUCTION OF ALL TRADES.
28	THIS CONTRACTOR SHALL BE RESPONSIBLE TO PROVIDE AND INSTALL ALL SUPPLEMENTARY SUPPORT, INCLUDING SUPPORT STEEL AS REQUIRED TO HANG ALL EQUIPMENT AND LIGHTING FROM THE EXISTING STRUCTURE IN ACCORDANCE WITH THE ARCHITECTURAL/STRUCTURAL SUPPORT AND LOADING CRITERIA.
29	IT IS THE RESPONSIBILITY OF THIS CONTRACTOR TO PROVIDE FULLY DIMENSIONED COORDINATION DRAWINGS FOR ALL OF HIS RESPECTIVE WORK. THESE DRAWINGS MUST BE FULLY COORDINATED WITH ALL EXISTING CONDITIONS. ALL HVAC, PLUMBING, FIRE PROTECTION, ELECTRICAL, LIGHTING, STRUCTURAL AND ARCHITECTURAL SYSTEMS PRIOR TO PREPARING COMPOSITE MULTI DISCIPLINE COORDINATION DRAWINGS.
30	ALL DISCONNECTING MEANS AND EQUIPMENT INDICATED ON THE DRAWING SHALL BE IDENTIFIED BY NAMEPLATE IN COMPLIANCE WITH CEC.
31	
32	THE WIRING METHODS AND MATERIALS INDICATED IN THE SPECIFICATIONS AND ON THE DRAWINGS SHALL BE INSTALLED AND CONNECTED IN ACCORDANCE WITH THE REQUIREMENTS OF THE CEC ARTICLE 300.
33	THE ELECTRICAL SERVICE AND DISTRIBUTION SYSTEM AS INDICATED ON THE RISER DIAGRAM AND MATERIALS INDICATED IN THE SPECIFICATIONS SHALL BE IN COMPLIANCE WITH THE REQUIREMENTS OF THE CEC ARTICLE 230 SERVICES.
34	ALL OVER CURRENT PROTECTION SHALL BE IN COMPLIANCE WITH NEC CODE SECTION 240, OVERCURRENT PROTECTION.
35	ALL GROUNDING REQUIREMENTS OF THE COMPLETE ELECTRICAL DISTRIBUTION SYSTEM AND AS INDICATED IN THE SPECIFICATIONS SHALL BE IN ACCORDANCE WITH THE CEC CODE ARTICLE 250, GROUNDING AND BONDING.
36	PRIOR TO ANY REQUIRED CUTTING AND PATCHING OF CONCRETE FLOOR AND/OR CUTTING OF ROOF, CONTRACTOR SHALL COORDINATE WITH BUILDING ENGINEER.
37	FOR ALL LIGHTING FIXTURES MOUNTED IN HUNG CEILING THE GENERAL CONTRACTOR SHALL PROVIDE AND INSTALL INDIVIDUAL SUPPORT AT EACH CORNER OF RECESSED LIGHTING TROFFER CONNECTED TO BUILDING STEEL ABOVE ALL CONDUIT AND MC CABLE MOUNTED ABOVE HUNG CEILING SHALL BE INDIVIDUALLY SUPPORTED IN THE SAME FASHION AS PER CEC REQUIREMENTS.
38	DO NOT SCALE FROM THESE DRAWINGS.
39	PLANS ARE PREPARED WITH REQUIRED BRANCH CIRCUITS INDICATED BY CIRCUITS NUMBERS. PROVIDE AND INSTALL ALL CONDUITS, CONDUCTORS, BOXES, MISCELLANEOUS FITTINGS, ETC. FOR A COMPLETE AND OPERABLE SYSTEM (HOME RUN SHOWN). BRANCH CIRCUIT INSTALLATION SHALL COMPLY WITH SPECIFICATIONS AND CEC
40	*ELECTRICAL RECEPTACLE, SWITCH AND CONTROL HEIGHTS, RECEPTACLE HEIGHTS:* ELECTRICAL RECEPTACLE OUTLETS ON BRANCH CIRCUITS OF 30 AMPERES OR LESS AND COMMUNICATION SYSTEM RECEPTACLES SHALL BE LOCATED NO MORE THAN 48 INCHES MEASURED FROM THE TOP OF THE RECEPTACLE OUTLET BOX OR RECEPTACLE HOUSING NOR LESS THAN 15 INCHES MEASURED FROM THE BOTTOM OF THE RECEPTACLE OUTLET BOX OR RECEPTACLE HOUSING TO THE LEVEL OF FINISHED FLOOR OR WORKING FLAT-FORM. IF THE REACH IS OVEN AN OBSTRUCTION (FOR EXAMPLE, A KITCHEN BASE CABINET) BETWEEN 20 AND 25 INCHES IN DEPTH, THE MAXIMUM HEIGHT MEASURED AT THE BOX IS REDUCED TO 44 INCHES FOR FORWARD APPROACH, OR 46 INCHES FOR SIDE APPROACH, PROVIDED THE OBSTRUCTION IS NO MORE THAN 24 INCHES IN DEPTH. OBSTRUCTION SHALL NOT EXCEED MORE THAN 25 INCHES FROM THE WALL BENEATH THE RECEPTACLE.
41	*SWITCH AND CONTROL HEIGHTS: (NM COMM. BLDG CODE 1136A.2:)* CONTROL OR SWITCHES INTENDED TO BE USED BY THE OCCUPANT OF THE ROOM OR AREA TO CONTROL LIGHTING AND RECEPTACLE OUTLETS, APPLIANCES, ALARMS OR COOLING, HEATING AND VENTILATING EQUIPMENT SHALL BE LOCATED NO MORE THAN 48 INCHES (1219MM) MEASURED FROM THE TOP OF THE OUTLET BOX NOR LESS THAN 15 INCHES (381MM) MEASURED FROM THE BOTTOM OF THE OUTLET BOX TO THE LEVEL OF THE FINISHED FLOOR OR WORKING PLATFORM. IF THE REACH IS OVER A PHYSICAL BARRIER OR AN OBSTRUCTION (FOR EXAMPLE, A KITCHEN BASE CABINET) BETWEEN 20 AND 25 INCHES (508 AND 635MM) IN DEPTH, THE MAXIMUM HEIGHT IS REDUCED TO 44 INCHES (1118MM) FOR FORWARD APPROACH, OR 46 INCHES (1168MM) FOR SIDE APPROACH, PROVIDED THE OBSTRUCTION IS NO MORE THAN 24 INCHES (610MM) IN DEPTH. PHYSICAL BARRIERS OR OBSTRUCTIONS SHALL NOT EXTEND MORE THAN 25 INCHES (635MM) FROM THE WALL BENEATH A CONTROL.

GENERAL ELECTRICAL NOTES

S.N.	DESCRIPTION
1	INSTALL ELECTRICAL RECEPTACLES BETWEEN 15in. - 48in. AFF.
2	INSTALL SWITCHES USED BY ROOM OCCUPANTS TO CONTROL LIGHTING, APPLIANCES OR ENVIRONMENTAL EQUIPMENT AT 36" - 48" A.F.F OR 36" - 44". IF A REACH OVER AN OBJECT EXCEEDS 20".
3	CONTROLS AND SWITCHES SHALL OPERATE WITH ONE HAND AND NOT REQUIRE TIGHT GRASPING, PINCHING OR TWISTING OF THE WRIST, A 5.0 LBS FORCE TO ACTIVATE CONTROLS.
4	LOWEST MOUNTING HEIGHT SHALL BE MEASURED AT THE BOTTOM OF DEVICE A.F.F. HIGHEST MOUNTING HEIGHT SHALL BE MEASURED AT THE TOP OF THE DEVICE A.F.F.

ELECTRICAL TESTING

1	PERFORM PHYSICAL AND VISUAL INSPECTION OF ELECTRICAL INSTALLATION. ENSURE THAT ALL WIRES HAVE BEEN TERMINATED, CONNECTIONS TIGHTENED, AND OPENING ARE PROTECTED
2	PERFORM PHASE ROTATION, CONTINUITY TEST, AND PHASE BALANCE.
3	VOLTAGE READINGS SHALL BE TAKEN AT VARIOUS TEST POINTS, OR AT THE DISCRETION OF THE AHJ.
4	VOLTAGE, PHASE AND AMP READINGS, SHALL BE TAKEN ON ALL THREE OR TWO PHASES (AS APPLICABLE) UNDER LOAD CONDITIONS.
5	VERIFY THAT MOTORS ARE ROTATING IN THE CORRECT DIRECTION. VERIFY THAT EACH PHASE LOAD IS WITHIN 20% OF EACH OTHER. ADJUST AS NECESSARY.
6	INSULATION TEST: PERFORM MEGGER AND RECORD INSULATION RESISTANCE, 1,000 V MEGGER FOR ONE MINUTE. MAKE TESTS WITH CIRCUITS ISOLATED FROM SOURCE AND LOAD. A) 600v CONDUCTORS SIZE #4/0 AND LARGER. B) SWITCHBOARDS AND PANEL BOARDS BUS-BAR. C) MOTORS AND TRANSFORMERS WINDINGS.
8	TESTING SHALL BE PER NEMA ACCEPTANCE STANDARDS AND CEC 2022.
9	SUBMIT TEST RESULTS TO ENGINEER. EQUIPMENT THAT HAVE FAILED TESTS SHALL BE REPLACED PRIOR TO PROJECT COMPLETION.

LIST OF ELECTRICAL ABBREVIATIONS AND LEGEND

AFF	ABOVE FINISHED FLOOR	GFCI	GROUND FAULT CIRCUIT INTERRUPTER	PB	PULLBOX
AFG	ABOVE FINISHED GRADE	GD	GARBAGE DISPOSAL	PNL	PANEL BOARD
A/C	AMP INTERRUPTING CURRENT	GND	GROUND		
AL	ALUMINUM			(R)	EXISTING TO BE RELOCATED
ATS	AUTOMATIC TRANSFER SWITCH	W.P	WEATHER PROOF	REF	REFRIGERATOR
				RGS	RIGID GALVANIZED STEEL
BFG	BELOW FINISHED GRADE	H	HOOD	SWBD	SWITCH BOARD
BKBD	BACKBOARD	HOA	HAND-OFF-AUTOMATIC	SQFT	SQUARE FEET
		HP	HORSEPOWER		
C	CONDUIT			TL	TWISTLOCK
CK	COOKER	IG	ISOLATED GROUND	TVSS	TRANSIENT VOLTAGE SURGE SUPPRESSION
CU	COPPER			TVP	TYPICAL
		JBOX	JUNCTION BOX		
DB	DISTRIBUTION BOARD			UG	UNDERGROUND
DR	DRYER	KVA	KILOVOLT-AMPS	UON	UNLESS OTHERWISE NOTED
DW	DISHWASHER	KW	KILOWATT	UPS	UNINTERRUPTABLE POWER
(E)	EXISTING TO REMAIN	MCC	MOTOR CONTROL CENTER	V	VOLTS
EA	EACH	MPC	MINI POWER CENTER	VA	VOLT-AMPS
EM	EMERGENCY	MW	MICROWAVE	V/PH/A	VOLTS/PHASE/AMPS
EMCS	ENERGY MANAGEMENT CONTROL SYSTEM			V/PH/HZ	VOLTS/PHASE/HERTZ
EWC	ELECTRIC WATER COOLER	NC	NORMALLY CLOSED	VFD	CARIABLE FREQUENCY DRIVE - PROVIDED BY
		NF	NON-FUSED	MECHANICAL	
F	FUSE (DUAL ELEMENT, TIME DELAY)	NFPA	NATIONAL FIRE PROTECTION ASSOCIATION		
FBO	FINISHED BY OTHERS	NIC	NOT IN CONTRACT	WP	WEATHER PROOF (NEMA 3R)
FPN	FUSE PER NAMEPLATE	O	OVEN	WM	WASHING MACHINE
		NL	NIGHT LIGHT		
		NO	NOT TO SCALE	(X)	EXISTING TO BE REMOVED
				XFMR	TRANSFORMER
				XP	EXPLOSION PROOF

GENERAL LIST OF ELECTRICAL SYMBOLS

SYMBOL	DESCRIPTION
	DUPLEX RECEPTACLE - WALL MOUNTED AT +18" A.F.F UNLESS NOTED
	DUPLEX RECEPTACLE 208V - WALL MOUNTED AT +18" A.F.F UNLESS NOTED
GFCI/WP	DUPLEX RECEPTACLE - WALL MOUNTED AT +18" A.F.F UNLESS NOTED WITH GROUND FAULT CIRCUIT INTERRUPTER
SD1	ONE-WAY SWITCH
SD2	TWO-WAY SWITCH
SD3	THREE-WAY SWITCH
SOC	SWITCH WITH OCCUPANCY SENSOR
ST	TIMER SWITCH
Y×YYA	NON-FUSED DISCONNECT SWITCH - SIZE AS INDICATED
S	SELF CONTAINED SMOKE DETECTOR/ANNUNCIATOR (120v WITH BATTERY BACKUP) - CEILING MOUNTED SPECIFIED UL217
S/CO	SELF CONTAINED SMOKE/CARBON MONOXIDE (120v WITH BATTERY BACKUP) - CEILING MOUNTED SPECIFIED UL2034/2075
E.F	JUNCTION BOX FOR EXTRACT FAN
	PANEL BOARD
OS	360° VIEW OCCUPANCY SENSOR (COVERAGE 250- 500 sq.ft.)
X-XX	CIRCUIT NUMBER
	LIGHTING CONDUIT
	POWER CONDUIT

INSTALLATION HEIGHTS

SYMBOL	HEIGHT	SYMBOL	HEIGHT
H1	12 in.	H4	35 in.
H2	18 in.	H5	48 in.
H3	24 in.	H6	55 in.

LIGHTING SCHEDULE (OR APPROVED EQUAL)

I.D	SYMBOL	DESCRIPTION	MODEL / BRAND	VOLT	WATTS
A	A	4" RECESSED LED CAN LIGHTING FIXTURE, WHITE	LITHONIA/ CALCULITE LED 4" GEN	120 v	18.4 W
B	B	4" RECESSED LED CAN LIGHTING FIXTURE, WHITE , WET LOCATION LISTED	LITHONIA/ CALCULITE LED 4" GEN	120 v	10.1 W
C	C	4" RECESSED LED CAN LIGHTING FIXTURE, WHITE , WET LOCATION LISTED, INSTALLED IN SHOWER	LITHONIA/ CALCULITE LED 4" GEN	120 v	10.1 W
D	D	7" SURFACE MOUNTED LED LIGHTING FIXTURE, WHITE, WET LOCATION LISTED	LITHONIA/ SD 7"	120 v	14 W
E	E	VANITY LED LIGHTING FIXTURE	LITHONIA/ FMVCCLS	120 v	18 W
G	G	FLOODLIGHTS, LED, WET LOCATION LISTED	LITHONIA/TWH LIGHT	120 v	78 W
H	H	UNDER CABINET LINEAR LED STRIP LIGHTING FIXTURE	LITHONIA/ 24LB50	120 v	4 W/FT
I	I	SURFACE LED LIGHT IN TECHNICAL AREA, RECTANGULAR, 1.2M , WET LOCATION LISTED	LITHONIA/ CSVT L48 ALO3 MVOLT SWW3 80CRI	120 v	27 W

ALL PROPOSED EXTERNAL LIGHTING FIXTURES WILL BE CONTROLLED BY A TIMER + AN OVERRIDE SWITCH ON TIMER TO OPERATE DURING NIGHT TIME HOURS, 30 MINUTES AFTER SUBSET AND 30 MINUTES BEFORE SUNRISE.

CODE COMPLIANCE

- 2022 CALIFORNIA MECHANICAL CODE (CMC), TITLE 24, PART 4
- 2022 CALIFORNIA PLUMBING CODE (CPC), TITLE 24, PART 5
- 2022 CALIFORNIA ENERGY CODE (CEnC), TITLE 24, PART 6
- 2022 CALIFORNIA ELECTRICAL CODE (CEC), TITLE 24, PART 3
- 2022 CALIFORNIA GREEN BUILDING STANDARDS CODE (CGBSC), TITLE 24, PART 11
- 2022 CALIFORNIA REFERENCED STANDARDS, TITLE 24, PART 12

ELECTRICAL SHEET INDEX

SHEET #	DESCRIPTION
E 1.01	ELECTRICAL COVER SHEET
E 2.01	ELECTRICAL SINGLE LINE DIAGRAM, FAULT CALCULATIONS AND LOADS CALCS, PANEL SCHEDULES
E 3.01	LIGHTING LAYOUT
E 4.01	POWER LAYOUT

JG DESIGN · BUILD

Seal

REGISTERED PROFESSIONAL ENGINEER JAMES E AUSTIN 4782 STRUCTURAL STATE OF CALIFORNIA

3/28/2025

TO THE BEST OF MY KNOWLEDGE, THE BUILDING DESIGN PLANS AND SPECIFICATIONS COMPLY WITH FLORIDA BUILDING CODE

NOT FOR CONSTRUCTION

ELECTRICAL COVER SHEET

scale:

drawn by:

checked by:

date:

project number:

E-01

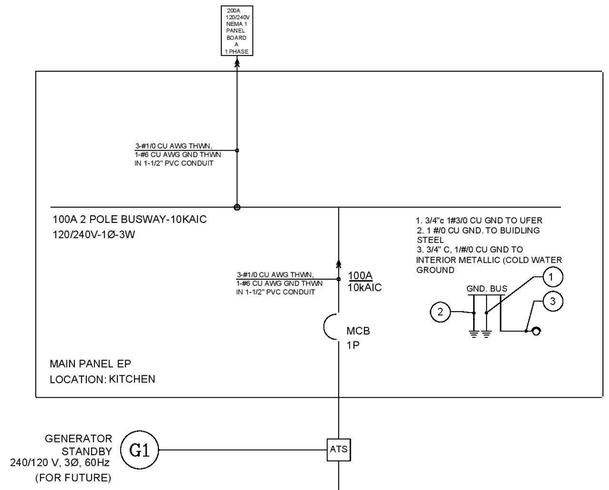

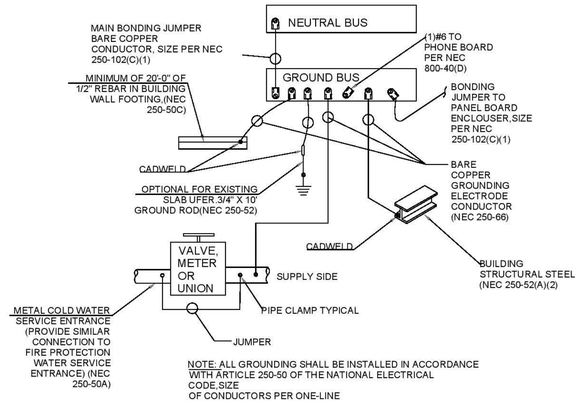

GROUNDING DETAIL

Auxiliary Gutter		X	Neutral Bus
Double Lugged		X	Ground Bus
			Isolated Ground Bus

PANEL: EP

Panel:	PANEL: EP		
Voltage	PHASE	Wire	Bus
240	1	4	100
(A) MCB/MLO		Mounting	
100 A	MCB	Surface	
ISC Rating:			

Light	Recp.	Equip.	Mech.	Description	Bkr	Wire	GRD	No.
792				LIGHTING (DINNING, BEDROOM,KITCHE	20A/1P	2 x 12AWG	#12G	1
782				LIGHTING (EXISTING AREA)	20A/1P	2 x 12AWG	#12G	2
30				SMOKE CARBON DETECTOR	20A/1P	2 x 12AWG	#12G	3
72				LIGHTING ((E) NEW AREA)	20A/1P	2 x 12AWG	#12G	4
	1.440			RECEPT. ((N)DINNING ROOM)	20A/1P	2 x 12AWG	#12G	5
	1.800			RECEPT. ((N)MASTER BEDROOM)	20A/1P	2 x 12AWG	#12G	6
	720			RECEPT. ((N)PANTRY)	20A/1P	2 x 12AWG	#12G	7
	360			RECEPT. ((N)M.BATHROOM)	20A/1P	2 x 12AWG	#12G	8
	720			RECEPT. (ISLAND)	20A/1P	2 x 12AWG	#12G	9
		1.500		DISH WASHING	20A/1P	2 x 12AWG	#12G	10
		900		GARBAGE DIPOSAL	20A/1P	2 x 12AWG	#12G	11
		190		KITCHEN EXHAUST FAN (K.E.F)	20A/1P	2 x 12AWG	#12G	12
		8.500		COOKER	50A/2P	3 x 6AWG	#10G	13
		500		REFRIGERATOR	20A/1P	2 x 12AWG	#12G	14
		1.200		MICROWAVE	20A/1P	2 x 12AWG	#12G	15
		5.000		DRYER	30A/2P	3 x 10AWG	#10G	16
		1.500		WASHING MACHINE	20A/1P	2 x 12AWG	#12G	17
	1.440			RECEPT.((E) NEW AREA)	20A/1P	2 x 12AWG	#12G	18
				SPARE				19
				SPARE				20
1.676	6.480	19.290	0	Sub-Total				

No.	Bkr	Wire	GRD	Description	Light	Recpt.	Equip.	Mech.
21				SPARE				
22				SPARE				
23				SPARE				
24				SPARE				
25				SPARE				
26								
27								
28								
29								
30								
31								
32								
33								
34								
35								
36								
37								
38								
39								
40								

Sub-Total	0	0	0	0
Sub-total (Fromleft side)	1.676	6.480	19.290	0
Totals Connected:	1.676	6.480	19.290	0
Totals Demand:	1.676	3.240	14.468	0

Total Load: 19383.5 VA 81 Amps

NOTES:
1. PROVIDE INVERSE TIME BREAKER FOR ALL MOTORS.
2. PROVIDE HACR TYPE CIRCUIT BREAKER FOR HEATING, A/C AND REFRIGERATION.
3. PROVIDE SWD TYPE CIRCUIT BREAKER FOR SWITCHED LIGHTING.
4. PROVIDE GFCI IN ALL WET LOCATIONS.

PANEL EP	
PANEL BOARD DESIGNATION	
SYSTEM VOLTAGE	240/120V, 1Ø, 3W
BUS SIZE	100A
SYSTEM TYPE	NORMAL
FEEDER PROT	100A-1P C/B Bus Plug
CONDUCTOR SIZE	⅜ AWG - #6G
CONDUCTOR/PHASE	1
MAINS	100A MCB
SCCR	FULLY RATED
MCB RATING	80%
GROUND FAULT	NO
FEEDER LENGTH (FT)	50
FEEDER V.DROP (%)	0.555
FAULT CURRENT	NO
KA/ IC RATING	10
ENCLOSURE	TYPE 1

JG
DESIGN • BUILD

Seal

REGISTERED PROFESSIONAL ENGINEER
JAMES E AUSTIN
4782
STRUCTURAL
STATE OF CALIFORNIA

3/28/2025

TO THE BEST OF MY KNOWLEDGE, THE BUILDING DESIGN PLANS AND SPECIFICATIONS COMPLY WITH FLORIDA BUILDING CODE

NOT FOR CONSTRUCTION

ELECTRICAL SINGLE LINE DIAGRAM, FAULT CALCULATIONS AND LOADS CALCS, PANEL SCHEDULES

scale:
drawn by:
checked by:
date:
project number:

E-02

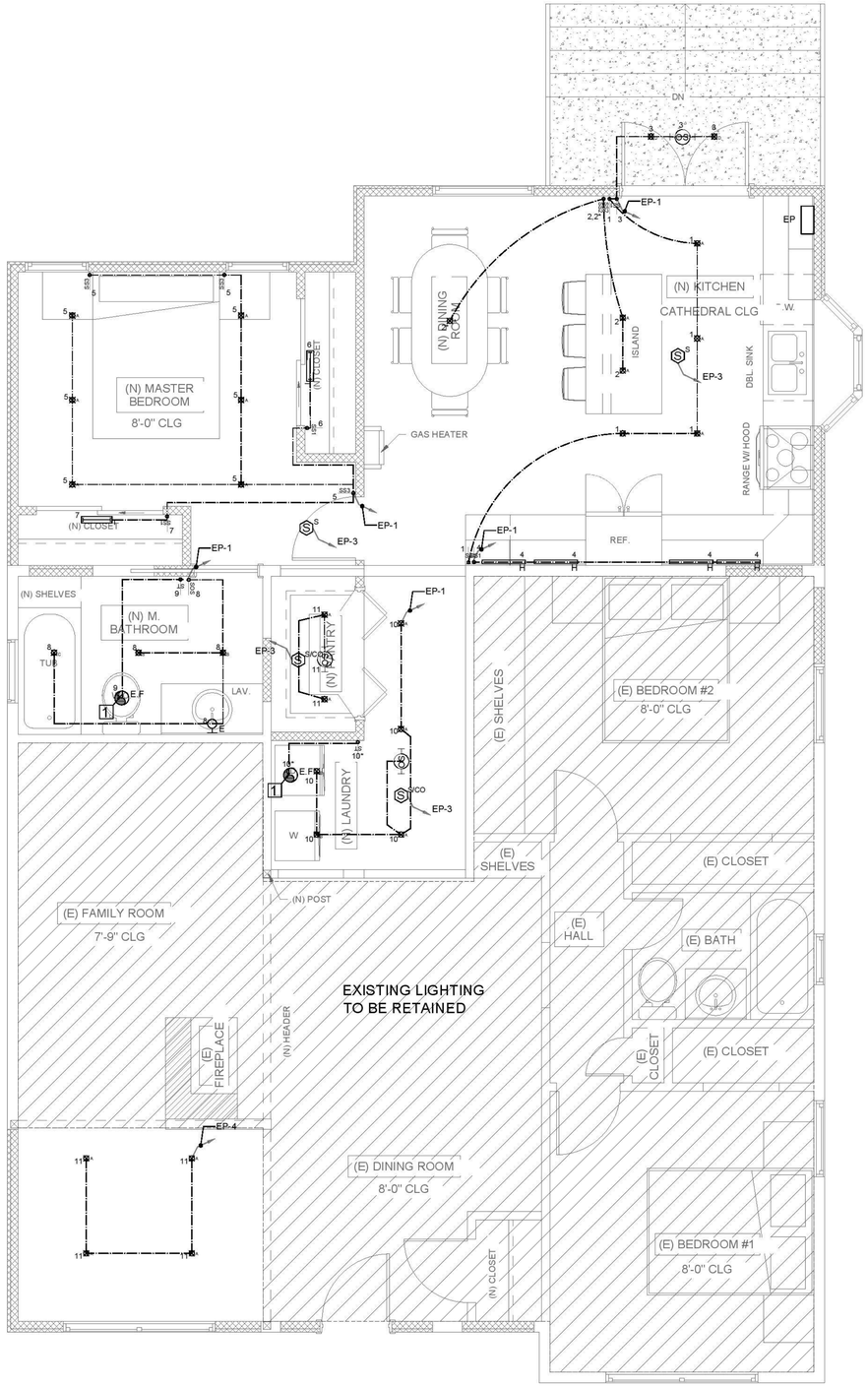

ELECTRICAL KEY NOTES:

1 — EXHAUST FAN

2 — KEF

NOTES:

EXISTING LIGHTING TO BE RETAINED

EXISTING AREA

I.D	SYMBOL	DESCRIPTION	MODEL / BRAND	VOLT	WATTS
A	A	6" RECESSED LED CAN LIGHTING FIXTURE, WHITE	LITHONIA/ CALCULITE LED 6" GEN	120 v	18.4 W
B	B	4" RECESSED LED CAN LIGHTING FIXTURE, WHITE , WET LOCATION LISTED	LITHONIA/ CALCULITE LED 4" GEN	120 v	10.1 W
C	C	4" RECESSED LED CAN LIGHTING FIXTURE, WHITE , WET LOCATION LISTED, INSTALLED IN SHOWER	LITHONIA/ CALCULITE LED 4" GEN	120 v	10.1 W
D	D	7" SURFACE MOUNTED LED LIGHTING FIXTURE, WHITE, WET LOCATION LISTED	LITHONIA/ SD 7"	120 v	14 W
E	E	VANITY LED LIGHTING FIXTURE	LITHONIA/ FMVCCLS	120 v	18 W
H	H	UNDER CABINET LINEAR LED STRIP LIGHTING FIXTURE	LITHONIA/ 24LB50	120 v	4 W/FT
I	I	SURFACE LED LIGHT IN TECHNICAL AREA , RECTANGULAR, 1.2M , WET LOCATION LISTED	LITHONIA/ CSVT L48 ALO3 MVOLT SWW3 80CRI	120 v	27 W

JG DESIGN · BUILD

Seal

REGISTERED PROFESSIONAL ENGINEER
JAMES E AUSTIN
4782
STRUCTURAL
STATE OF CALIFORNIA

3/28/2025

TO THE BEST OF MY KNOWLEDGE, THE BUILDING DESIGN PLANS AND SPECIFICATIONS COMPLY WITH FLORIDA BUILDING CODE

NOT FOR CONSTRUCTION

LIGHTING LAYOUT

scale:

drawn by:

checked by:

date:

project number:

E-03

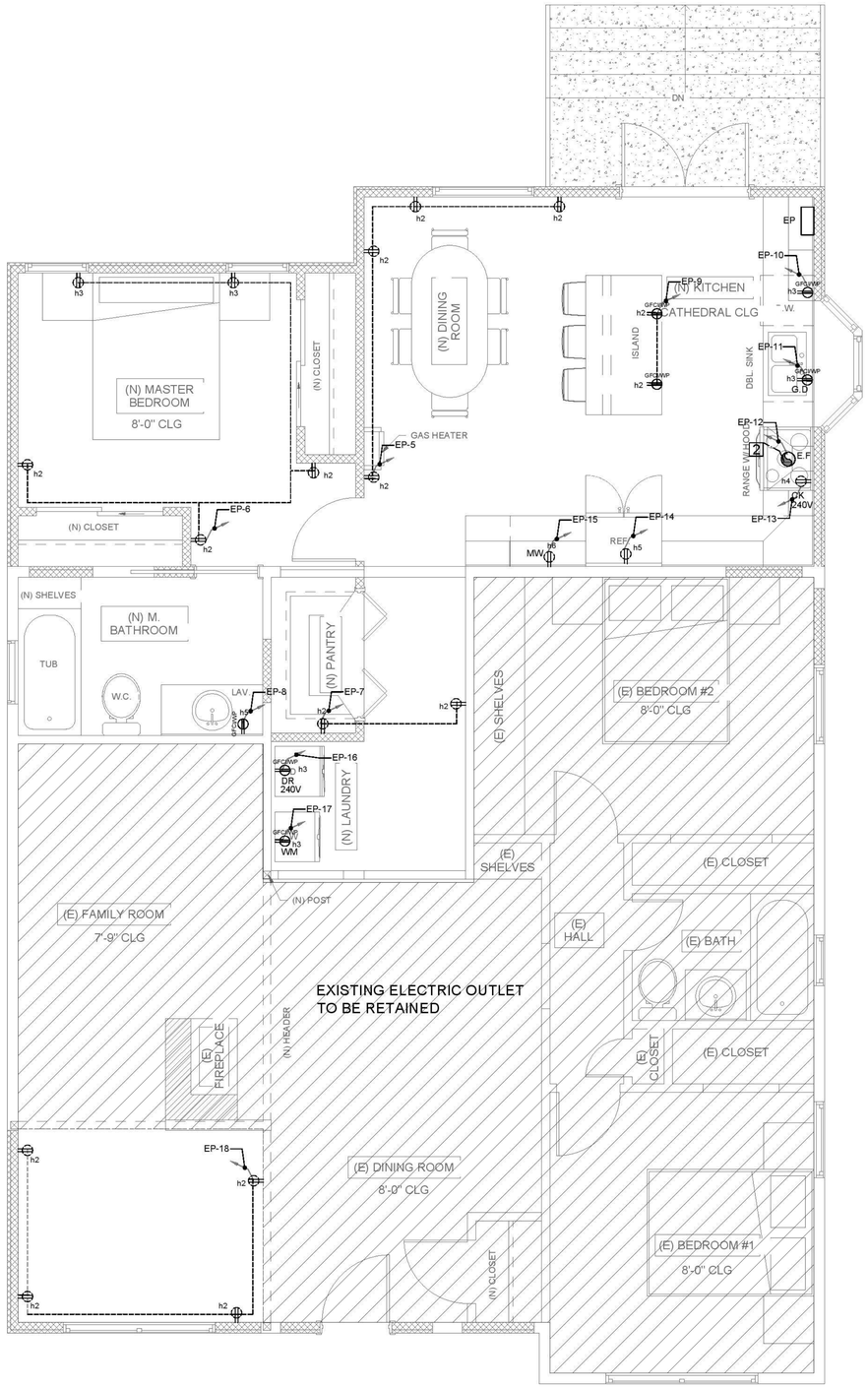

ELECTRICAL KEY NOTES:

1 — EXHAUST FAN

2 — KEF

NOTES:

EXISTING AREA

JG DESIGN · BUILD

Seal

REGISTERED PROFESSIONAL ENGINEER
JAMES E AUSTIN
4782
STRUCTURAL
STATE OF CALIFORNIA

3/28/2025

TO THE BEST OF MY KNOWLEDGE, THE BUILDING DESIGN PLANS AND SPECIFICATIONS COMPLY WITH FLORIDA BUILDING CODE

NOT FOR CONSTRUCTION

POWER LAYOUT

scale:

drawn by:

checked by:

date:

project number:

E-04

PLUMBING ABBREVIATIONS

A	
ABV	ABOVE
ADJ	ADJUSTABLE
AC	AIR CONDITIONING
AFC	ABOVE FINISHED CEILING
AFF	ABOVE FINISHED FLOOR
AFG	ABOVE FINISHED GRADE
AHU	AIR HANDLING UNIT
AVG	AVERAGE
B	
BF	BELOW FLOOR
BFP	BACK-FLOW PREVENTER
BT	BATH-TUB
BTU	BRITISH THERMAL UNIT
BV	BALL VALVE
C	
CDP	CONDENSATE DRAIN PIPE
CLG	CEILING
COND	CONDENSATE
CO	CLEAN-OUT
CONT	CONTINUATION / CONTINUED
CP	CIRCULATING PUMP
CV	CHECK VALVE
CW	COLD WATER / CITY WATER
CWP	COLD WATER PIPE
D	
D	DEPTH
DFU	DRAINAGE FIXTURE UNITS
DN	DOWN
DW	DOMESTIC WATER / DISH WASHER
DWG	DRAWING
E	
(E)	EXISTING
EA	EACH
ELEC	ELECTRIC
ELEV	ELEVATION
EQ	EQUAL
EVC	EVAPORATIVE COOLER
EWH	ELECTRIC WATER HEATER
EWT	ENTERING WATER TEMPERATURE
EXP	EXPANSION
EXP.T	EXPANSION TANK
F	
°F	DEGREES FAHRENHEIT
F	FILTER
F/A	FROM ABOVE
F/B	FROM BELOW
FCO	FLOOR CLEAN-OUT
FCU	FAN COIL UNIT
FD	FLOOR DRAIN / FUNNEL DRAIN
FH	FIRE HYDRANT / FIRE HOSE
FIXT	FIXTURE
FPS	FEET PER SECOND
FS	FLOOR SINK / FIRE SPRINKLER
FT	FEET / FOOT
FLR	FLOOR
G	
G	GAS
GAL	GALLON
GM	GAS METER
GND	GROUND
GPD	GALLONS PER DAY
GPH	GALLONS PER HOUR
GPM	GALLONS PER MINUTE
GV	GATE VALVE
GW	GREASE WASTE
GWH	GAS WATER HEATER
H	
H	HEIGHT
HB	HOSE BIBB
HD	HEAD / HUB DRAIN
HTR	HEATER
HP	HORSE POWER
HPWH	HEAT PUMP WATER HEATER
HW	HOT WATER
HWP	HOT WATER PIPE
HWRP	HOT WATER RETURN PIPE
HZ	HERTZ
I	
ID	INSIDE DIAMETER
IDU	INDOOR UNIT
IE	INVERT ELEVATION
IN	INCH
IN WC	INCH, WATER COLUMN
INSUL	INSULATION
INT	INTERNAL / INTERIOR
IW	INDIRECT WASTE
K	
KS	KITCHEN SINK
KW	KILOWATT
L	
L	LENGTH
LAV	LAVATORY
LBS	POUNDS
LP	LOW PRESSURE
LRA	LOCKED ROTOR AMPS
LV	LEVEL
LWT	LEAVING WATER TEMPERATURE
M	
MAX	MAXIMUM
MBH	THOUSAND BTUH
MCA	MINIMUM CIRCUIT AMPACITY
MECH	MECHANICAL
MH	MANHOLE
MIN	MINIMUM
MOCP	MAXIMUM OVERCURRENT PROTECTION
MOPD	MAXIMUM OVERCURRENT PROTECTION DEVICE
MS	MOP SINK
MUA	MAKE-UP AIR UNIT
MV	MIXING VALVE
N	
(N)	NEW
NC	NORMALLY CLOSED
NIC	NOT IN CONTRACT
NO	NORMALLY OPEN, NUMBER
NTS	NOT TO SCALE
O	
OA	OUTSIDE AIR
OD	OUTSIDE DIAMETER OVER-FLOW DRAIN
ODU	OUTDOOR UNIT
P	
P	PUMP / PRESSURE / POWER
PD	PRESSURE DROP
PH	PHASE
PLBG	PLUMBING
POC	POINT OF CONNECTION
POU	POINT OF USE
PP	POLYPROPYLENE
PPM	PARTS PER MILLION
PSI	POUNDS PER SQUARE INCH
PSIG	POUNDS PER SQUARE INCH, GAUGE
PVC	POLYVINYL CHLORIDE
Q	
QTY	QUANTITY
R	
(R)	RELOCATED
R	RISE
RD	ROOF DRAIN
RECIRC	RECIRCULATE/RECIRCULATING
REQD	REQUIRED
REQD	REQUIRED
REV	REVISION
RLA	RUNNING LOAD AMPS
RM	ROOM
RP	RECIRCULATION PUMP
RPM	REVOLUTIONS PER MINUTE
RPZ	REDUCED PRESSURE ZONE
RTU	ROOFTOP UNIT
RV	RELIEF VALVE
S	
S	SEWER
SAN	SANITARY
SD	STORM DRAIN
SE	SEWAGE EJECTOR
SEC	SECONDARY
SF	SQUARE FOOT
SH	SHOWER
SQ IN	SQUARE INCH
SOV	SHUT-OFF VALVE
SP	STATIC PRESSURE / SUMP PUMP
SPEC	SPECIFICATION
T	
T/A	TO ABOVE
T/B	TO BELOW
TBD	TO BE DETERMINED
TDH	TOTAL DYNAMIC HEAD
TEMP	TEMPERATURE
TP	TRAP PRIMER
TV	THERMOSTATIC MIXING VALVE
TYP.	TYPICAL
U	
U	URINAL
U/F	UNDER FLOOR
U/G	UNDER GROUND
UH	UNIT HEATER
U/S	UNDER SLAB
UON	UNLESS OTHERWISE NOTED
UTR	UP THROUGH ROOF
V	
V	VOLT / VENT
VAC	VACUUM
VEL	VELOCITY
VIF	VERIFY IN FIELD
VTR	VENT THROUGH ROOF
W	
W	WATT / WIDTH / WASTE
W/	WITH
W/O	WITHOUT
WC	WATER CLOSET
WCO	WALL CLEAN-OUT
WIC	WALK-IN COOLER
WIF	WALK-IN FREEZER
WM	WATER METER / WASHING MACHINE
WSFU	WATER SUPPLY FIXTURE UNIT
WT	WEIGHT

PLUMBING LEGEND

FITTINGS	
	BALL VALVE
	CHECK VALVE - ONE WAY VAVLE
	PIPE ELBOW / PIPE DROP
	PIPE UP
	PIPE DOWN
	PIPE UNION
	BACK FLOW PREVENTER
	CALIBRATED BALANCE VALVE
	FLEXIBLE HOSE CONNECTER
	FLOW CONTROL VALVE
	HOSE BIBB
	ISOLATION VALVE
	MIXING VALVE
	PRESSURE GAGE
	PRESSURE REDUCING VALVE
	SOLENOID VALVE
	THERMOMETER
	TRIPLE DUTY VALVE
MISCELLANEOUS	
	CONDENSATE POC
	POC - WATER, WASTE, VENT, GAS, ETC (DRAWING DEPENDANT)
	COLD WATER POC
	WALL CLEAN-OUT
	FLOOR CLEAN-OUT
	FLOOR SINKS: HALF GRATE
	FLOOR DRAIN
	TRENCH DRAIN
	AREA DRAIN
XX FU / XX" DIA	PIPE FIXTURE UNIT LOAD VALUE AND PIPE SIZE TAG
	PUMP / RECIRCULATION PUMP
	EXPANSION TANK
W	WATER METER
G	GAS METER
X	PLUMBING NOTE CALL-OUT

SPECIAL NOTES TO CONTRACTORS

1) THE CONTRACTOR SHALL EXAMINE THE PROPOSED PROJECT SITE AND EXAMINE ALL EXISTING CONDITIONS, INCLUDING ALL SERVICE POINT OF CONNECTIONS THAT COULD AFFECT THE PLUMBING SCOPE OF WORK PRIOR TO SUBMITTING A BID. THE CONTRACTOR SHALL VERIFY ALL EXISTING CONDITIONS PERTAINING TO THE PLUMBING WORK SHOWN AND SHALL INCLUDE ALL OF THE NECESSARY LABOR AND MATERIAL COSTS IN THE PROPOSAL TO CONNECT SERVICES AND TO PROVIDE FULLY OPERATIONAL SYSTEMS ANY DISCREPANCIES NOTED SHALL BE REPORTED TO THE ARCHITECT PRIOR TO BID. NO ADDITIONAL ALLOWANCES WILL BE GRANTED DUE TO LACK OF KNOWLEDGE OF SITE CONDITIONS. CONTRACTOR SHALL ACCEPT SOLE AND COMPLETE RESPONSIBILITY FOR JOBSITE CONDITIONS INCLUDING THE SAFETY OF ALL PERSONAL AND PROPERTY DURING THE EXECUTION OF THE WORK.
2) THE DRAWINGS SHALL INDICATE DIAGRAMMATICALLY THE CONFIGURATION OF THE PRINCIPAL EQUIPMENT & FIXTURES, PIPING, DUCTWORK, AND OTHER MATERIAL. DRAWINGS SHALL BE ADHERED TO AS MUCH AS POSSIBLE IN ORDER TO OBTAIN A CLEAN INSTALLATION WHILE WORKING TO AVOID ANY OBSTRUCTIONS. INSPECTION OF THE SITE CONDITIONS THAT MAY AFFECT IS NECESSARY FOR INSTALLATION. PROVIDE REQUIRED FITTINGS AND ACCESSORIES TO MEET SIDE CONDITIONS WHETHER THEY ARE SHOWN OR NOT.
3) THE CONTRACTOR IS RESPONSIBLE FOR LOCATING THE EXACT LOCATION OF ALL EXISTING UTILITIES PRIOR TO WORK BEING DONE. THE CONTRACTOR IS RESPONSIBLE FOR PROTECTING AND REPAIRING ANY DAMAGE DONE TO THEM. CONTRACTOR SHALL CONTACT THE UNDERGROUND SERVICE ALERT AT 1-800-642-2444 48 HOURS PRIOR TO BEGINNING THE WORK.
4) THE CONTRACTOR SHALL COORDINATE SERVICE LOCATIONS AND SIZES OF UTILITIES WITH ALL UTILITY COMPANIES. THE CONTRACTOR SHALL BE RESPONSIBLE FOR PROVIDING ALL NECESSARY TRENCHING, CONDUITS, CONDUCTORS, METERS AND ANY OTHER NECESSARY OUTLETS REQUIRED BY THE UTILITY COMPANIES. THE OWNER SHALL PAY ALL REQUIRED UTILITY FEES. TRENCHING AND BACKFILLING SHALL BE IN ACCORDANCE WITH DRAWINGS AND SPECIFICATIONS SHOWN ON THE PLANS. PRIOR TO INSTALLATION, TRENCHING FOR UNDERGROUND SYSTEM SHALL BE STAKED OUT FOR APPROVAL BY THE OWNER. NO SITE WORK SHALL BEGIN PRIOR TO STAKE-OUT APPROVAL BY THE AUTHORITY HAVING JURISDICTION OVER THE PROJECT.
5) THE INTENTION OF THE PLANS AND SPECIFICATIONS IS NOT TO COVER ALL INCIDENTALS NECESSARY TO PROVIDE A COMPLETE AND FULLY OPERATIONAL SYSTEM. THE CONTRACTOR SHALL FURNISH ALL LABOR, MATERIALS, PROVIDE NECESSARY TRANSPORTATION AND STORAGE OF MATERIALS & EQUIPMENT, AND TO PROVIDE MISCELLANEOUS SERVICES, ETC, REQUIRED TO ACCOMPLISH THE DESIGN. ANYTHING THAT MAY BE REASONABLE CONSTRUED AS NECESSARY AS PART OF THE INSTALLATION SHALL BE INCLUDED, WHETHER THAT TOPIC IS SPECIFICALLY SHOWN, MENTIONED, OR NOT. THE EOR SHALL PROVIDE INTERPRETATIONS UPON REQUEST.
6) ALL WORK AND MATERIALS SHALL BE PERFORMED AND INSTALLED IN COMPLIANCE WITH ALL STATE AND LOCAL CODES AND AMENDED CODES THAT HAVE BEEN ADOPTED BY THE AUTHORITY HAVING JURISDICTION (THE AHJ) OVER THE PROJECT. NOTHING ON THESE PLANS IS TO BE MISCONSTRUED TO PERMIT WORK NOT CONFORMING TO THE CODES AND REGULATIONS APPLICABLE TO THIS PROJECT. THE CODES SHALL DETERMINE THE MINIMUM REQUIRED GUIDELINES FOR MATERIALS, METHODS, AND REQUIRED LABOR PRACTICES NOT OTHERWISE SPECIFIED IN THE SPECIFICATIONS.
7) THE CONTRACTOR IS RESPONSIBLE FOR VERIFYING ALL SITE VOLTAGES PRIOR TO BIDDING AND ORDERING EQUIPMENT. REIMBURSEMENT WILL NOT BE THE RESPONSIBILITY OF THE CLIENT SHOULD THE ELECTRICAL CONTRACTOR INCUR ADDITIONAL COSTS DUE TO SUBSTITUTION OF MECHANICAL EQUIPMENT HAVING ELECTRICAL REQUIREMENTS THAT DIFFER FROM SITE CONDITIONS.
8) THE CONTRACTOR WILL PROVIDE ALL OPERATION AND MAINTENANCE MANUALS, PREVENTATIVE MAINTENANCE MANUALS, AND ANY OTHER DOCUMENTATION NECESSARY TO MAINTAIN ALL PLUMBING AND MECHANICAL EQUIPMENT TO THE OWNER.
9) THE CONTRACTOR WILL PROVIDE, TO THE OWNER AND LOCAL AUTHORITIES HAVING JURISDICTION, EVIDENCE OF LICENSING, BONDING, AND INSURANCE. THE CONTRACTOR WILL ALSO PROVIDE ANY OTHER NECESSARY ADMINISTRATIVE FUNCTIONS REQUIRED FOR CONTRACTOR'S WORK.
10) THE CONTRACTOR SHALL FURNISH AND INSTALL INDICATED FIXTURES OR THEIR APPROVED EQUALS SHOWN ON THE SCHEDULES OF THESE PLANS. REFER TO THE ARCHITECTURAL DRAWINGS FOR REQUIRED INSTALLATION HEIGHTS AND/OR CLEARANCES.
11) THE CONTRACTOR WILL BE RESPONSIBLE FOR OBTAINING AND PAYING FOR ALL REQUIRED PERMITS AND SERVICE CHARGES. THE CONTRACTOR SHALL COMPLY WITH ALL NECESSARY LICENSING AND PERMITTING REQUIREMENTS THAT ARE ENFORCED BY THE LOCAL BUILDING OFFICIAL UTILITY DISTRICT AND SHALL ATTEND ALL REQUIRED INSPECTIONS FOR THE WORK PERFORMED UNDER THIS CONTRACT.
12) CUT AND PATCH CONCRETE AS REQUIRED. CUTTING OR WELDING OF STRUCTURAL MEMBERS SHALL ONLY BE DONE WITH PRIOR APPROVAL OF THE STRUCTURAL ENGINEER OF RECORD (SEOR). PATCHING SHALL BE SUBJECT TO THE ACCEPTANCE OF THE OWNER.
13) ANY SAW CUT TRENCHES SHALL BE FULLY REPAIRED AND REINFORCED TO PREVENT DROOPING OR SAGGING. ROUGH UP THE EDGED PRIOR POURING NEW CONCRETE TO ENSURE GOOD CONTACT BETWEEN NEW AND EXISTING CONCRETE.
14) CONTRACTOR SHALL COORDINATE WITH ALL OTHER TRADES TO ENSURE A COMPLETE INSTALLATION. ENSURE CONNECTION OF ALL EQUIPMENT FURNISHED BY OTHERS AS REQUIRED. INSTALLATION OF ALL WORK SHALL BE CLEAR OF STRUCTURAL AND ARCHITECTURAL MEMBERS WHEN POSSIBLE. ABOVE GRADE PIPING SHALL BE INSTALLED AS HIGH AS POSSIBLE TO PROVIDE CLEARANCE FOR DUCTWORK, EQUIPMENT, INSPECTION, AND MAINTENANCE OF SAID EQUIPMENT.
15) CONTRACTOR SHALL RESTORE ANY DAMAGED MATERIALS RESULTING FROM THEIR WORK AND LEAVE THE PREMISES IN GOOD CONDITION WHEN FINISHED WITH THE WORK. CONTRACTOR SHALL ADJUST, REPAIR, REPLACE, OR CLEAN PRODUCTS THAT HAVE BEEN DAMAGED, FINAL APPROVAL OF ADJUSTED, REPAIRED, REPLACED OR CLEANED PRODUCTS SHALL BE DETERMINED BY THE OWNER OR OWNERS REPRESENTATIVE.
16) MINOR ADJUSTMENTS SHALL BE PERMITTED TO BE MADE TO WORK WHERE REQUESTED BY OWNER. WHEN THESE ADJUSTMENTS ARE NECESSARY FOR PROPER OPERATION AND ARE WITHIN THE SCOPE OF THE CONTRACT. NOTIFY APPROPRIATE ARCHITECT AND/OR ENGINEERS OF MODIFICATIONS SO THAT PLANS MAY BE UPDATED TO REFLECT CHANGES.
17) MATERIALS AND EQUIPMENT SHALL BE NEW, OR OF LIKE-NEW CONDITION. COMMERCIAL-GRADE, AND UL-LISTED. FIXTURES SHALL BE SUITABLE FOR THE LOCATIONS AND ENVIRONMENTAL CONDITIONS WHERE THEY ARE TO BE INSTALLED. REUSE EXISTING FIXTURES AND/OR EQUIPMENT ONLY WHEN THEY ARE FOUND TO BE COMPLIANT WITH THE CONTRACT DOCUMENTS, THEY ARE IN ACCEPTABLE CONDITION, AND HAVE BEEN APPROVED BY THE ENGINEER OF RECORD.
18) INSTALLATION OF ALL EQUIPMENT, MATERIALS, AND SYSTEMS SHALL BE IN ACCORDANCE WITH MANUFACTURERS INSTALLATION REQUIREMENTS AND INSTRUCTIONS.
19) INSTALL ALL PIPING AND DUCTWORK IN A DIRECT AND LINEAR FASHION TO CREATE AN ORDERLY APPEARANCE. RUN ALL PIPE AND DUCTS PARALLEL TO THE BUILDING CONSTRUCTION AS MUCH AS POSSIBLE. MAINTAIN ADEQUATE CLEARANCE FOR MAINTENANCE, AND GRADIENTS WHERE REQUIRED. PROVIDE ADDITIONAL SPACE FOR EXPANSION AND CONTRACTION WHERE NECESSARY.
20) CONTRACTOR SHALL PROVIDE A THOROUGH AND COMPLETE START-UP TEST OF ALL SYSTEMS, EQUIPMENT, MODIFIED SYSTEMS/EQUIPMENT, TO CLEARLY DEMONSTRATE PROPER OPERATION OF SAID SYSTEMS AND EQUIPMENT, FURNISHED AND/OR INSTALLED FOR THIS CONTRACT.
21) CONTRACTOR SHALL RESTORE ANY DAMAGE THAT HAS RESULTED FROM THE WORK DONE AND LEAVE THE PROJECT SITE CLEAN AND READY FOR OCCUPATION. CLEAN, REPAIR, ADJUST, AND/OR REPLACE ANY ITEMS THAT HAVE BEEN DAMAGED DURING THE COURSE OF THE WORK PERFORMED. RESTORE/REPAIR ANY WALL AND ROOF PENETRATIONS TO MATCH THE EXISTING/SURROUNDING WALL OR ROOF RESPECTIVELY.
22) ALL MATERIALS AND EQUIPMENT PROVIDED AND INSTALLED SHALL BE GUARANTEED FREE FROM MECHANICAL/ELECTRICAL/WORKMANSHIP DEFECTS FOR AT LEAST ONE YEAR FROM THE DATE OF FINAL ACCEPTANCE. CONTRACTOR IS RESPONSIBLE FOR ALL DAMAGES DONE TO THE PREMISES CAUSED BY BREAKS, LEAKS, AND/OR FAILURES IN FITTINGS AND PIPES INSTALLED UNDER THIS CONTRACT, AS WELL AS ANY DAMAGE RESULTING FROM ROOF PENETRATIONS THAT WERE MADE AND SEALED UNDER CONTRACTOR'S SCOPE OF WORK.
23) CONTRACTOR SHALL PROVIDE DRIP PANS UNDER ALL PIPING THAT IS ROUTED ABOVE ELECTRICAL EQUIPMENT. THE PIPING AND DRIP PAN SHALL BE INSTALLED AT LEAST 6" ABOVE THE EQUIPMENT, PER NEC 110.26(E). SHOULD THE 6" CLEARANCE NOT BE ACHIEVABLE, THE PIPING SHALL BE ROUTED AROUND THE FOOT PRINT OF THE EQUIPMENT. THE DRIP PAN SHALL DISCHARGE INTO AN APPROVED FIXTURE OR FIXTURE TAILPIECE.
24) CONTRACTOR SHALL PROVIDE FLOW CONTROL DEVICES ON ALL LAVATORIES. CONTRACTOR SHALL PROVIDE ALL FIXTURES WITH STOP VALVES, SAID STOP VALVES CAN BE INTEGRAL TO THE SUPPLY FITTINGS FOR THE FIXTURE.
25) CONTRACTOR SHALL WRAP HOT WATER PIPING AND WASTE LINES AT EACH ACCESSIBLE SINK, LAVATORY, ETC, WITH 1/2" POLYETHYLENE PIPE INSULATION WITH A MINIMUM R-VALUE OF 3.21.
26) CONTRACTOR SHALL INSTALL ALL CLEANOUTS TO BE AIR TIGHT. CLEANOUTS SHALL BE INSTALLED AT THE ENDS OF EVERY WASTE LINE GREATER THAN 10' AND EVERY 100' THEREAFTER TO THE BUILDING CLEAN OUT LOCATED 2' OUTSIDE OF THE FACE OF THE BUILDING. WALL CLEANOUTS SHALL BE INSTALLED AT THE BASE OF EVERY WASTE RISER.
27) ALL NEW WASTE PIPE SHALL BE INSTALLED SUCH THAT THEY MATCH THE EXISTING INVERT ELEVATION.
28) DRILLING THROUGH EXISTING CONCRETE WALLS SHALL BE PERMITTED WHERE REQUIRED TO INSTALL OR REROUTE PLUMBING WORK. ALL PENETRATIONS SHALL BE SEALED TO BE WATER TIGHT.
29) EXISTING PIPING THAT HAS BEEN FOUND TO NOT BE REQUIRED FOR NEW SCOPE OF WORK SHALL BE PERMITTED TO BE CUT, CAPPED AND ABANDONED IN PLACE SO LONG AS IT DOESN'T INTERFERE WITH THE NEW WORK TO BE DONE AND MAINTENANCE OF THE NEW PIPING, DUCTWORK, AND EQUIPMENT.
30) ALL CONTRACTORS (GENERAL CONTRACTOR AND SUB-CONTRACTORS) BIDDING THIS PROJECT ARE REQUIRED TO VISIT THE JOB SITE AND VERIFY THE EXISTING CONDITIONS PRIOR TO SUBMITTING THEIR BID. CONTRACTORS ARE TO CAREFULLY REVIEW ALL CONSTRUCTION DOCUMENTS AND NOTE ANY DISCREPANCIES BETWEEN THE CONSTRUCTION DOCUMENTS AND THE CONDITIONS OBSERVED AT THE JOB SITE PRIOR TO SUBMISSION OF ANY BID. THE BUILDING OWNER REPRESENTATIVE LISTED BELOW MAY BE CONTACTED FOR ACCESS TO THE JOB SITE.
31) CONTRACTORS ARE RESPONSIBLE FOR VERIFYING THE LOCATION AND CONDITION OF ALL POINTS OF CONNECTION, LOCATION AND CONDITION OF ALL BUILDING (ROOF/FLOOR/CEILING) PENETRATIONS, LOCATION AND CONDITION OF ALL UTILITIES AND BUILDING SYSTEMS INCLUDING, BUT NOT LIMITED TO GAS, WATER, SEWER, VENT, ELECTRICAL, BUILDING MECHANICAL SYSTEMS, DUCT CONNECTIONS, EXHAUST/OUTSIDE AIR CONNECTIONS, SECURITY, FIRE ALARM, DATA, AND PHONE PRIOR TO SUBMISSION OF THEIR BID.
32) ANY DISCREPANCIES BETWEEN THE CONSTRUCTION DOCUMENTS AND THE CONDITIONS OBSERVED SHALL BE BROUGHT TO THE ATTENTION, IN WRITING, TO THE ARCHITECT AND/OR ENGINEER PRIOR TO PROCEEDING WITH CONSTRUCTION.
33) PRIOR TO PERFORMING WORK, CONTRACTOR TO COORDINATE PIPE ROUTING WITH ALL OTHER TRADES AND EXISTING FIELD CONDITIONS, EXACT PIPE SIZES, INVERT ELEVATIONS, PRESSURES FOR LOCATIONS OF ANY SEWER, WATER PIPING AND WATER METER WITH CIVIL UTILITIES DRAWINGS, AND ANY OTHER ENGINEER AS APPLICABLE.
34) ALL WATER PIPING SHALL BE INSTALLED ON INTERIOR SIDE OF THE BUILDING WALL INSULATION.
35) CONTRACTOR SHALL PROVIDE VALVES LOCATED ABOVE LAY-IN CEILING OR 24"x24" CEILING ACCESS PANEL COORDINATE FINAL LOCATION AND SIZE WITH ARCHITECT. PROVIDE BALANCING VALVES FOR HOT WATER RETURN SYSTEM AS REQUIRED.

CODE COMPLIANCE

- 2022 CALIFORNIA MECHANICAL CODE (CMC), TITLE 24, PART 4
- 2022 CALIFORNIA PLUMBING CODE (CPC), TITLE 24, PART 5
- 2022 CALIFORNIA ENERGY CODE (CEnC), TITLE 24, PART 6
- 2022 CALIFORNIA ELECTRICAL CODE (CEC), TITLE 24, PART 3
- 2022 CALIFORNIA GREEN BUILDING STANDARDS CODE (CGBSC), TITLE 24, PART 11
- 2022 CALIFORNIA REFERENCED STANDARDS, TITLE 24, PART 12

SCOPE OF WORK

- INSTALLATION OF NEW COLD AND HOT WATER PIPING AND FITTINGS FOR NEW FIXTURES.
- INSTALLATION OF ALL NEW SEWER AND VENT PIPING AND FITTINGS FOR NEW FIXTURES.
- INSTALLATION OF NEW BACK-FLOW PREVENTER AND WATER CONNECTION TO
- INSTALL MINIMUM OF 45 GAL. CLARIFIER FOR THE DRAIN SYSTEM OUTSIDE THE 6. BUILDING.

GALGREEN PLUMBING REQUIREMENTS

PROJECTS WHICH DISTURB LESS THAN ONE ACRE OF SOIL SHALL MANAGE STORM WATER DRAINAGE DURING CONSTRUCTION BY ONE OF THE FOLLOWING: A. RETENTION BASINS. B. WHERE STORM WATER IS CONVEYED TO A PUBLIC DRAINAGE SYSTEM, WATER SHALL BE FILTERED BY USE OF A BARRIER SYSTEM, WATTLE OR OTHER APPROVED METHOD.
CGC 4.106.3. SITE GRADING OR DRAINAGE SYSTEM WILL MANAGE ALL SURFACE WATER FLOWS TO KEEP WATER FROM ENTERING BUILDINGS (SWALES, WATER COLLECTION, FRENCH DRAINS, ETC.). EXCEPTION: ADDITIONS NOT ALTERING THE DRAINAGE PATH.
CGC 4.303.1.3.2. WHEN A SHOWER IS PROVIDED WITH MULTIPLE SHOWER HEADS, THE SUM OF FLOW TO ALL THE HEADS SHALL NOT EXCEED 1.8 GPM @ 80 PSI, OR THE SHOWER SHALL BE DESIGNED SO THAT ONLY ONE HEAD IS ON AT A TIME.
CGC 4.304.1. LANDSCAPE IRRIGATION WATER USE SHALL HAVE WEATHER OR SOIL BASED CONTROLLERS.
CGC 4.408.1. THE PLANS THAT A MINIMUM OF 65% OF CONSTRUCTION WASTE IS TO BE RECYCLED.
CGC 4.408.2. THE CONTRACTOR SHALL SUBMIT A CONSTRUCTION WASTE MANAGEMENT PLAN.
CGC 4.410.1. THE BUILDER IS TO PROVIDE AN OPERATION MANUAL (CONTAINING INFORMATION FOR MAINTAINING APPLIANCES, ETC.) FOR THE OWNER AT THE TIME OF FINAL INSPECTION.
CGC 4.503.1. THE GAS FIREPLACE(S) SHALL BE A DIRECT-VENT SEALED- COMBUSTION TYPE. WOOD-STOVE OR PELLET STOVES MUST BE US EPA PHASE II RATED APPLIANCES.
CGC 5.303.3.1. THE EFFECTIVE FLUSH VOLUME OF ALL WATER CLOSETS SHALL NOT EXCEED 1.28 GALLONS PER FLUSH. TANK-TYPE WATER CLOSETS SHALL BE CERTIFIED TO THE PERFORMANCE CRITERIA OF THE U.S. EPA WATER-SENSE SPECIFICATION FOR TANK-TYPE TOILETS.
CGC 5.303.3.2. THE EFFECTIVE FLUSH VOLUME OF WALL-MOUNTED URINALS SHALL NOT EXCEED 0.125 GALLONS PER FLUSH. ALL OTHER URINALS SHALL NOT EXCEED 0.5 GALLONS PER FLUSH.
CGC 5.303.3.3. SINGLE SHOWERHEADS SHALL HAVE A MAXIMUM FLOW RATE OF NOT MORE THAN 2.0 GALLONS PER MINUTE AT 80 PSI. SHOWER HEADS SHALL BE CERTIFIED TO THE PERFORMANCE CRITERIA OF THE U.S. EPA WATER-SENSE SPECIFICATION FOR SHOWERHEADS. WHEN A SHOWER IS SERVED BY MORE THAN ONE SHOWERHEAD, THE COMBINED FLOW RATE OF ALL SHOWERHEADS SHALL NOT EXCEED 2.0 GALLONS PER MINUTE AT 80 PSI, OR THE SHOWER SHALL BE DESIGNED TO ALLOW ONLY ONE SHOWER OUTLET TO BE IN OPERATION AT A TIME.
CGC 5.303.3.4. i) NONRESIDENTIAL LAVATORY FAUCETS SHALL HAVE A MAXIMUM FLOW RATE OF NOT MORE THAN 0.5 GALLONS PER MINUTE AT 60 PSI. ii) KITCHEN FAUCETS AND WASH FOUNTAINS SHALL HAVE A MAXIMUM FLOW RATE OF NOT MORE THAN 1.8 GALLONS PER MINUTE AT 60 PSI. KITCHEN FAUCETS MAY TEMPORARILY INCREASE THE FLOW RATE ABOVE THE MAXIMUM RATE, BUT NOT TO EXCEED 2.2 GALLONS PER MINUTE AT 60 PSI, AND MUST DEFAULT TO A MAXIMUM FLOW RATE OF 1.8 GALLONS PER MINUTE AT 60 PSI. iii) METERING FAUCETS SHALL NOT DELIVER MORE THAN 0.20 GALLONS PER CYCLE.
CGC 5.303.5. FOR THOSE OCCUPANCIES WITHIN THE AUTHORITY OF THE CALIFORNIA BUILDING STANDARDS COMMISSION AS SPECIFIED IN SECTION 103, THE PROVISIONS OF SECTION 5.303.3 AND 5.3034 SHALL APPLY TO NEW FIXTURES IN ADDITIONS OR AREAS OF ALTERATIONS TO THE BUILDING.
CGC 5.410.4.5. PROVIDE THE BUILDING OWNER OR REPRESENTATIVE WITH DETAILED OPERATING AND MAINTENANCE INSTRUCTIONS AND COPIES OF SYSTEM PRIOR TO FINAL INSPECTION.

PLUMBING SHEET INDEX

SHEET #	DESCRIPTION
P-01	PLUMBING COVER SHEET
P-02	PLUMBING REQUIREMENTS & CODE ANALYSIS
P-03	PLUMBING CALCULATIONS, SCHEDULES & GENERAL DETAILS
P-04	PLUMBING PLAN
P-05	PLUMBING ISOMETRIC
P-06	GAS PLAN-ISOMETRIC

JG DESIGN · BUILD

Seal

REGISTERED PROFESSIONAL ENGINEER JAMES E AUSTIN 4782 STRUCTURAL STATE OF CALIFORNIA

3/28/2025

TO THE BEST OF MY KNOWLEDGE, THE BUILDING DESIGN PLANS AND SPECIFICATIONS COMPLY WITH FLORIDA BUILDING CODE

NOT FOR CONSTRUCTION

PLUMBING COVER SHEET

scale:

drawn by:

checked by:

date:

project number:

P-01

PLUMBING GENERAL REQUIREMENTS

1. ALL PIPING SHALL BE RUN PARALLEL TO BUILDING LINES AND SUPPORTED AND ANCHORED AS REQUIRED TO FACILITATE EXPANSION AND CONTRACTION. ALL PIPING SHALL BE CONCEALED EXCEPT IN UNFINISHED SPACES. INSTALL AS REQUIRED TO MEET ALL CONSTRUCTION CONDITIONS AND TO ALLOW FOR INSTALLATION OF OTHER WORK SUCH AS DUCTS AND ELECTRICAL CONDUIT. AT ALL CONNECTIONS BETWEEN FERROUS PIPING AND NONFERROUS PIPING, PROVIDE AN ISOLATING DIALECTIC UNION. ALL HANGERS SHALL BE COMPATIBLE WITH PIPING MATERIAL TO PREVENT CORROSION. PROVIDE ALL FITTINGS, ACCESSORIES, OFFSETS, AND MATERIALS NECESSARY TO FACILITATE THE PLUMBING SYSTEM'S FUNCTIONING AS INDICATED BY THE DESIGN AND THE EQUIPMENT INDICATED.
2. PROVIDE A COMPLETE SYSTEM OF STANDARD WEIGHT CAST IRON NO-HUB VENT RISERS WHERE THE CEILING SPACE IS USED AS A RETURN AIR PLENUM OR USE CO-EXTRUDED PVC DWV (SCHEDULE 40) PIPE (WHERE PERMITTED BY CODE/LOCAL AUTHORITIES) WHERE THERE IS A DUCTED RETURN AIR SYSTEM. DO NOT USE PVC PIPE IN RETURN AIR PLENUM SPACES. THE VENT SYSTEM SHALL BE CARRIED THROUGH THE ROOF WITH APPROPRIATE FLASHING.
3. CONDENSATE & INDIRECT DRAIN PIPING ABOVE FLOOR SHALL BE CO-EXTRUDED PVC DWV (SCHEDULE 40) PIPE, FITTINGS AND CONNECTIONS. PIPING BELOW GRADE SHALL BE CO-EXTRUDED PVC DWV(SCHEDULE 40) PIPE WITH SOLVENT WELD FITTINGS.
4. LAYOUT WATER PIPING SO THAT THE ENTIRE SYSTEM CAN BE DRAINED. HOT AND COLD WATER PIPING SHALL BE 1/2" MIN. CPVC PIPE WITH SOLVENT FITTING. PROVIDE WATER HAMMER ARRESTERS AT EACH FIXTURE OR GROUP OF FIXTURES AS REQUIRED. INSTALL CHROME PLATED BRASS ESCUTCHEON PLATES AT ALL PENETRATIONS THROUGH FINISHED SURFACES (INCLUDING CABINET INTERIORS).
5. INSULATE (AS ALLOWED BY CODE) ALL LISTED SERVICE PIPING AS FOLLOWS. DOMESTIC COLD/HOT WATER, HOT WATER RETURN, STORM WATER PIPING. PROVIDE 1" PREFORMED FIBERGLASS, ASJ/SS-11, FLAME SPREAD 25, SMOKE DEVELOPED 50, ASTM C-547. FOR CONDENSATE PIPING PROVIDE 1/2" THICK INSULATION OF SAME CHARACTERISTICS AS LISTED FOR 1" ABOVE. WHERE PERMITTED BY LOCAL CODES, PROVIDE 1/2" SELF-ADHESIVE UNICELLULAR FOAM PIPE INSULATION WITH PRE-FORMED PVC FITTING COVERS - EQUAL TO SELF-ADHESIVE ARMSTRONG 2000 WITH K FACTOR OF 0.27 AT 75 DEGREES MEAN TEMPERATURE. INSULATE ANY EXPOSED CONDENSATE PIPING WITH WASTE TEMPERATURE BELOW 60 DEGREES F.
6. SHUTOFF VALVES, WITH UNIONS SHALL BE PROVIDED FOR SERVICE TO EACH PLUMBING FIXTURE, FOOD SERVICE EQUIPMENT ITEM OR OTHER EQUIPMENT ITEM, TO FACILITATE ISOLATION FOR REPAIR OR REPLACEMENT. VALVES SHALL BE EQUAL TO JENKINS #902-T BALL VALVE, CHROME-FINISHED BRONZE, TEFLON SEATS AND PACKING, 400

LB. W.O.G., SOLDER END.

7. ACCESS PANELS SHALL BE PROVIDED WHERE CONCEALED CONTROL DEVICES, VALVES, ETC. ARE CONCEALED WITHIN WALLS. WHERE ACCESS FOR ADJUSTMENT AND MAINTENANCE IS POSSIBLE THROUGH LAY-IN SUSPENDED CEILINGS, ACCESS PANELS ARE NOT REQUIRED.
8. CONDENSATE DRAINS SHALL BE PROVIDED FOR EACH AIR CONDITIONING UNIT. HORIZONTAL CONDENSATE DRAINS ABOVE ANY CEILING SHALL BE INSULATED WITH MIN. 3/8" THICK CLOSED CELL INSULATION.
9. PIPING: WASTE, VENT, AND STORM DRAIN PIPING SHALL BE CO-EXTRUDED PVC SCHEDULE 40 PIPE, WATER PIPE SHALL BE CPVC PIPE, CONDENSATE PIPING SHALL BE CO-EXTRUDED PVC (SCHEDULE 40) PIPE
10. INSIDE GAS PIPING SHALL BE BLACK IRON SCHEDULE 40 WITH MALLEABLE IRON FITTINGS. OUTSIDE SHALL BE GALVANIZED IRON SCHEDULE 40 WITH GALVANIZED FITTINGS. GAS LINE TO BE PAINTED GRAY IN COLOR. A 24 HOUR METERED GAS TEST SHALL BE REQUIRED.
11. PROVIDE WATER TIGHT FLASHINGS WHEREVER PIPES PASS THROUGH EXTERIOR WALLS, ROOFS, OR FLOORS.
12. LOCATION OF EXISTING UTILITIES AND POINTS OF CONNECTION ARE APPROXIMATE. CONTRACTOR SHALL VERIFY EXACT LOCATIONS AND DEPTHS OF EXISTING UTILITIES AND SERVICES PRIOR TO STARTING WORK OF THIS SECTION. IF INDICATED POINTS OF CONNECTION CANNOT BE MADE TO EXISTING UTILITIES AS FOUND, THE CONTRACTOR SHALL NOTIFY THE ENGINEER PRIOR TO INSTALLING ANY WORK WHICH MAY BE AFFECTED.
13. VALVES SHALL BE NIBCO, JENKINS, HAMMOND, RED & WHITE OR APPROVED EQUAL. SERVICE PRESSURE SHALL BE SUITABLE FOR SERVICE INTENDED. THE MAIN WATER SHUT OF VALVE SHALL BE A FULL PORT BALL TYPE AND APPROVED FOR SERVICE INTENDED.
14. PROVIDE HANGERS AND SUPPORTS AS REQUIRED. PLUMBERS TAPE AND WIRE ARE NOT ACCEPTABLE.
15. ALL EQUIPMENT THAT REQUIRES KEYS OR SPECIAL TOOLS TO OPERATE SHALL SUPPLY THE OWNER WITH TWO OF ANY SUCH KEYS OR TOOLS FOR EACH PIECE OF EQUIPMENT THAT REQUIRE THE SAME.
16. ALL PLUMBING, ELECTRICAL, AND GAS LINES SHALL BE CONCEALED WITHIN THE THE BUILDING STRUCTURE TO AS GREAT EXTENT AS POSSIBLE. ALL LINES NOT CONCEALED SHALL BE SECURED 6" OFF THE FLOOR AND 3/4" FROM THE WALLS USING STANDOFF BRACKETS
17. AN APPROVED BACK-FLOW PREVENTOR SHALL BE PROPERLY INSTALLED UPSTREAM OF ANY POTENTIAL HAZARD BETWEEN THE POTABLE WATER SUPPLY AND SOURCE OF CONTAMINATION.
18. WATER SUPPLY CARBONATORS SHALL BE PROTECTED BY AN APPROVED REDUCED PRESSURE PRINCIPLE BACK-FLOW PREVENTOR. THE RELIEF VALVE SHALL DRAIN IN-DIRECTLY TO A FLOOR SINK WITH A 1" MIN. AIR GAP.
19. SUBMIT GAS LOAD CALCULATIONS IN ACCORDANCE WITH CPC TABLE 12-8 TO VERIFY THE PIPE SIZES ARE ADEQUATE FOR THE MAXIMUM DELIVERY CAPACITY OF CUBIC FEET OF GAS PER HOUR.
20. A GAS TEST IS REQUIRED UPON COMPLETION OF THE INSTALLATION, ALTERATION, OR REPAIR OF ANY GAS PIPING. THE CITY SHALL BE NOTIFIED WHEN GAS PIPING IS READY FOR INSPECTION.
21. IF WATER PRESSURE EXCEEDS 80 PSI, EXPANSION TANK & APPROVED PRESSURE REGULATOR SHALL BE INSTALLED.
22. NON-REMOVABLE BACK FLOW PREVENTER OR BIBB-TYPE VACUUM BREAKER WILL BE INSTALLED ON ALL EXTERIOR HOSE BIBBS.
23. HOT WATER RE-CIRCULATING SYSTEM IS INSTALLED, THE ENTIRE LENGTH OF HOT WATER PIPES SHALL BE INSULATED.
24. ALL PLUMBING FIXTURES SHALL BE OF WATER CONSERVATION TYPE AS REQUIRED BY LOCAL AUTHORITY HAVING JURISDICTION.
25. ALL SANITARY DRAINAGE PIPING 4" AND SMALLER SHALL BE SLOPED AT 1 4" PER FOOT. PIPING 4" AND LARGER SHALL BE SLOPED AT 1 8" PER FOOT.
26. ALL CONDENSATE DRAIN PIPING SHALL BE SLOPED AT 1 8" PER FOOT AND PROVIDE ACCESSIBLE CLEANOUTS AT ALL CHANGES OF DIRECTION.
27. FLOOR DRAINS SHALL BE PROVIDED WITH TRAP PRIMERS, AND/OR TRAP SEALS WHERE APPROVED BY THE AHJ.
28. WATER PIPING LOCATED ABOVE GROUND SHALL BE PERMITTED TO BE TYPE 'M' HARD COPPER TUBING. THE JOINTS SHALL BE JOINED WITH LEAD FREE SOLDER. WATER PIPING LOCATED BELOW GRADE SHALL BE PERMITTED TO BE TYPE 'L' SOFT COPPER TUBING. THE JOINTS BELOW GRADE SHALL BE SIL-FLOS, OR EQUAL. SEE PLUMBING PLANS FOR LOCATIONS AND SIZES.

DW PIPE SIZES PER 2022 CPC APPENDIX A

METER AND STREET SERVICE (inches)	BUILDING SUPPLY AND BRANCHES (inches)	MAXIMUM ALLOWABLE LENGTH (FEET)														
		40	60	80	100	150	200	250	300	400	500	600	700	800	900	1000
PRESSURE RANGE — 30 to 45 psi																
3/4	1/2	6	5	4	3	2	1	1	1	0	0	0	0	0	0	0
3/4	3/4	16	16	14	12	9	6	5	5	4	4	3	2	2	2	1
3/4	1	29	28	23	21	17	15	13	12	10	8	6	6	6	6	6
1	1	36	31	27	25	20	17	15	13	12	10	8	6	6	6	6
3/4	1-1/4	36	33	31	28	24	23	21	19	17	16	13	12	12	11	11
1	1-1/4	54	47	42	38	32	28	25	23	19	17	14	12	12	11	11
1-1/2	1-1/4	78	68	57	48	38	32	28	25	21	18	15	12	12	11	11
1	1-1/2	85	84	79	65	56	48	43	38	32	28	26	22	21	20	20
1-1/2	1-1/2	150	124	105	91	70	57	49	45	36	31	26	23	21	20	20
2	1-1/2	151	129	129	110	80	64	53	46	38	32	27	23	21	20	20
1	2	85	85	85	85	85	85	82	80	66	61	57	52	49	46	43
1-1/2	2	220	205	190	176	155	138	127	120	104	85	70	61	57	54	51
2	2	370	327	292	265	217	185	164	147	124	96	70	61	57	54	51
2	2-1/2	445	418	390	370	330	300	280	265	240	220	198	175	158	143	133

WATER SUPPLY CODE NOTES

CPC 609.12.2- ALL HOT WATER SUPPLY & RETURN PIPING SHALL BE INSULATED AS FOLLOWS:
a. 1" INSULATION THICKNESS REQUIRED FOR 3/4" PIPE.
b. 1-1/2" INSULATION THICKNESS REQUIRED FOR 1" TO 1-1/2" PIPE.
c. 2" INSULATION THICKNESS REQUIRED FOR 2" PIPE & LARGER.

CPC 604.2 - WATER PIPE AND FITTINGS WITH A LEAD CONTENT WHICH EXCEED 0.25% SHALL BE PROHIBITED IN SYSTEMS CONVEYING POTABLE WATER. (CALIFORNIA HEALTH & SAFETY CODE 116875).

ALL FIXTURES IN HANDICAP RESTROOMS SHALL BE INSTALLED IN ACCORDANCE WITH THE REQUIREMENTS OF THE STATE OF CALIFORNIA HANDICAP CODE AND LOCAL HANDICAP CODES HAVING JURISDICTION.

CPC 301.2 - ALL FIXTURES, EQUIPMENT, PIPING, AND MATERIALS SHALL BE LISTED.

ALL SERVICE WATER HEATING EQUIPMENT TO BE IN COMPLIANCE WITH THE MODEL ENERGY CODE REQUIREMENTS AND LABELED.

ALL HOSE BIBBS AND JANITORIAL SERVICE SINKS SHALL BE EQUIPPED WITH APPROVED, PROPERLY INSTALLED ATMOSPHERIC TYPE VACUUM BREAKERS.

INSULATION SHALL BE PROVIDED ON ALL HOT WATER AND CIRCULATING PIPING AND THE FIRST 5' ON THE COLD WATER FROM THE WATER HEATER.

CPC-407.2.2-THE MAXIMUM FLOW RATE OF RESIDENTIAL LAVATORY FAUCETS SHALL NOT EXCEED 1.2 GALLONS (4.54 L) PER MINUTE AT 60 PSI. THE MINIMUM FLOW RATE OF RESIDENTIAL LAVATORY FAUCETS SHALL NOT BE LESS THAN 0.8 GALLONS (3.03 L) PER MINUTE AT 20 PSI.

CPC-411.2-THE EFFECTIVE FLUSH VOLUME OF ALL WATER CLOSETS SHALL NOT EXCEED 1.28 GALLONS (4.8 L) PER FLUSH WHEN TESTED IN ACCORDANCE WITH ASME A112.19.2/CSA B45.1.

CPC-420.2-SINK FAUCETS SHALL HAVE A MAXIMUM FLOW RATE OF NOT MORE THAN 2.2 GPM AT 60 PSI (8.3 L/M AT 414 KPA).

CPC-420.2.2-THE MAXIMUM FLOW RATE OF KITCHEN FAUCETS SHALL NOT EXCEED 1.8 GALLONS (6.81 L) PER MINUTE AT 60 PSI. KITCHEN FAUCETS MAY TEMPORARILY INCREASE THE FLOW ABOVE THE MAXIMUM RATE, BUT NOT TO EXCEED 2.2 GALLONS (8.32 L) PER MINUTE AT 60 PSI, AND MUST DEFAULT TO A MAXIMUM FLOW RATE OF 1.8 GALLONS (6.81 L) PER MINUTE AT 60 PSI

CPC-606.2-A FULLWAY VALVE CONTROLLING OUTLETS SHALL BE INSTALLED ON THE DISCHARGE SIDE OF EACH WATER METER AND EACH UNMETERED WATER SUPPLY. WATER PIPING SUPPLYING MORE THAN ONE BUILDING ON ONE PREMISE SHALL BE EQUIPPED WITH A SEPARATE FULLWAY VALVE TO EACH BUILDING, SO ARRANGED THAT THE WATER SUPPLY CAN BE TURNED ON OR OFF TO AN INDIVIDUAL OR SEPARATE BUILDING PROVIDED.

CPC-602.3-NO PLUMBING FIXTURE, DEVICE, OR CONSTRUCTION SHALL BE INSTALLED OR MAINTAINED, OR SHALL BE CONNECTED TO A DOMESTIC WATER SUPPLY, WHERE SUCH INSTALLATION OR CONNECTION PROVIDES A POSSIBILITY OF POLLUTING SUCH WATER SUPPLY OR CROSS-CONNECTION BETWEEN A DISTRIBUTING SYSTEM OF WATER FOR DRINKING AND DOMESTIC PURPOSES AND WATER THAT BECOMES CONTAMINATED BY SUCH PLUMBING FIXTURE, DEVICE, OR CONSTRUCTION UNLESS THERE IS PROVIDED A BACKFLOW PREVENTION DEVICE APPROVED FOR THE POTENTIAL HAZARD.

CPC-608.2-WHERE STATIC WATER PRESSURE IN THE WATER SUPPLY PIPING IS EXCEEDING 80 PSI (552 KPA), AN APPROVED-TYPE PRESSURE REGULATOR PRECEDED BY AN ADEQUATE STRAINER SHALL BE INSTALLED AND THE STATIC PRESSURE REDUCED TO 80 PSI (552 KPA) OR LESS.

CPC-504.3-504.3.1 LISTED WATER HEATERS: THE CLEARANCES SHALL NOT BE SUCH AS TO INTERFERE WITH COMBUSTION AIR, DRAFT HOOD CLEARANCE AND RELIEF, AND ACCESSIBILITY FOR SERVICING. LISTED WATER HEATERS SHALL BE INSTALLED IN ACCORDANCE WITH THEIR LISTINGS AND THE MANUFACTURER'S INSTALLATION INSTRUCTIONS.

CPC-504.3.2 UNLISTED WATER HEATERS: UNLISTED WATER HEATERS SHALL BE INSTALLED WITH A CLEARANCE OF 12 INCHES (305 MM) ON ALL SIDES AND REAR. COMBUSTIBLE FLOORS UNDER UNLISTED WATER HEATERS SHALL BE PROTECTED IN AN APPROVED MANNER. [NFPA 54:10.27.2.2]

CPC-504.4-A WATER HEATER INSTALLATION SHALL BE PROVIDED WITH OVERPRESSURE PROTECTION USING AN APPROVED, LISTED DEVICE INSTALLED IN ACCORDANCE WITH THE TERMS OF ITS LISTING AND THE MANUFACTURER'S INSTALLATION INSTRUCTIONS.

CPC-504.5-A WATER HEATER INSTALLATION OR A HOT WATER STORAGE VESSEL INSTALLATION SHALL BE PROVIDED WITH OVERTEMPERATURE PROTECTION BY MEANS OF AN APPROVED, LISTED DEVICE INSTALLED IN ACCORDANCE WITH THE TERMS OF ITS LISTING AND THE MANUFACTURER'S INSTALLATION INSTRUCTIONS.

CPC-506.2.1-THE MINIMUM REQUIRED VOLUME SHALL BE 50 CUBIC FEET PER 1000 BRITISH THERMAL UNITS PER HOUR (BTU/H)(4.83 M3/KW). [NFPA 54:9.3.2.1]

CPC-506.4.2-ONE PERMANENT OPENING, COMMENCING WITHIN 12 INCHES (305 MM) OF THE TOP OF THE ENCLOSURE, SHALL BE PROVIDED. THE APPLIANCE SHALL HAVE CLEARANCES OF AT LEAST 1 INCH (25.4 MM) FROM THE SIDES AND BACK AND 6 INCHES (152 MM) FROM THE FRONT OF THE APPLIANCE.

CPC-507.2-WATER HEATERS SHALL BE ANCHORED OR STRAPPED TO RESIST HORIZONTAL DISPLACEMENT DUE TO EARTHQUAKE MOTION. STRAPPING SHALL BE AT POINTS WITHIN THE UPPER ONE THIRD (1/3) AND LOWER ONE-THIRD (1/3) OF ITS VERTICAL DIMENSIONS. AT THE LOWER POINT, A MINIMUM DISTANCE OF FOUR(4) INCHES (102 MM) SHALL BE MAINTAINED ABOVE THE CONTROLS WITH THE STRAPPING.

PIPE MATERIAL SCHEDULE

SYSTEM	JOINING METHOD	MATERIAL
CONDENSATE PIPING - HIDDEN	SOLVENT	PVC
CONDENSATE PIPING - EXPOSED	SOLVENT	PVC (PROTECTED WITH WATER BASED LATEX PAINT)
DOMESTIC WATER	95/5 SOLDER	TYPE "L" OR "K" COPPER W/ SEISMIC BRACING
SANITARY WASTE & VENT (ABOVE GRADE)	SOLVENT	ABS

SEWER & INDIRECT WASTE CODE NOTES

CMC-310.1-CONDENSATE FROM AIR WASHERS, AIR-COOLING COILS, CONDENSING APPLIANCES, AND THE OVERFLOW FROM EVAPORATIVE COOLERS AND SIMILAR WATER-SUPPLIED EQUIPMENT OR SIMILAR AIR-CONDITIONING EQUIPMENT SHALL BE COLLECTED AND DISCHARGED TO AN APPROVED PLUMBING FIXTURE OR DISPOSAL AREA. WHERE DISCHARGED INTO THE DRAINAGE SYSTEM, EQUIPMENT SHALL DRAIN BY MEANS OF AN INDIRECT WASTE PIPE. THE WASTE PIPE SHALL HAVE A SLOPE OF NOT LESS THAN 1/8 INCH PER FOOT (10.4 MM/M) OR 1 PERCENT SLOPE AND SHALL BE OF APPROVED CORROSION-RESISTANT MATERIAL NOT SMALLER THAN THE OUTLET SIZE IN ACCORDANCE WITH SECTION 310.3 OR SECTION 310.4 FOR AIR-COOLING COILS OR CONDENSING APPLIANCES, RESPECTIVELY. CONDENSATE OR WASTEWATER SHALL NOT DRAIN OVER A PUBLIC WAY.

CMC-310.3.1-CONDENSATE DRAIN LINES SHALL BE CONFIGURED OR PROVIDED WITH A CLEANOUT TO PERMIT THE CLEARING OF BLOCKAGES AND FOR MAINTENANCE WITHOUT REQUIRING THE DRAIN LINE TO BE CUT.

CMC-310.5-AIR-CONDITIONING CONDENSATE WASTE PIPES SHALL CONNECT INDIRECTLY, EXCEPT WHERE PERMITTED IN SECTION 310.6, TO THE DRAINAGE SYSTEM THROUGH AN AIR GAP OR AIR BREAK TO TRAPPED AND VENTED RECEPTORS, DRY WELLS, LEACH PITS, OR THE TAILPIECE OF PLUMBING FIXTURES. A CONDENSATE DRAIN SHALL BE TRAPPED IN ACCORDANCE WITH THE APPLIANCE MANUFACTURER'S INSTRUCTIONS OR AS APPROVED.

CPC-801.2-INDIRECT WASTE PIPING SHALL DISCHARGE INTO THE BUILDING DRAINAGE SYSTEM THROUGH AN AIR GAP OR AIR BREAK AS SET FORTH IN THIS CODE. WHERE A DRAINAGE AIR GAP IS REQUIRED BY THIS CODE, THE MINIMUM VERTICAL DISTANCE AS MEASURED FROM THE LOWEST POINT OF THE INDIRECT WASTE PIPE OR THE FIXTURE OUTLET TO THE FLOOD-LEVEL RIM OF THE RECEPTOR SHALL BE NOT LESS THAN 1 INCH (25.4 MM).

CPC-801.3.1-EXCEPT FOR REFRIGERATION COILS AND ICE-MAKING MACHINES, THE SIZE OF THE INDIRECT WASTE PIPE SHALL BE NOT SMALLER THAN THE DRAIN ON THE UNIT, BUT SHALL BE NOT SMALLER THAN 1 INCH (25 MM), AND THE MAXIMUM DEVELOPED LENGTH SHALL NOT EXCEED 15 FEET (4572 MM). INDIRECT WASTE PIPE FOR ICE-MAKING MACHINES SHALL BE NOT LESS THAN THE DRAIN ON THE UNIT AND IN NO CASE LESS THAN 3/4 OF AN INCH (20 MM). INDIRECT WASTE PIPES EXCEEDING 5 FEET (1524 MM), BUT LESS THAN 15 FEET (4572 MM) IN LENGTH SHALL BE DIRECTLY TRAPPED, BUT SUCH TRAPS NEED NOT BE VENTED.

CPC-906.1-EACH VENT PIPE OR STACK SHALL EXTEND THROUGH ITS FLASHING AND SHALL TERMINATE VERTICALLY NOT LESS THAN 6 INCHES (152 MM) ABOVE THE ROOF NOR LESS THAN 1 FOOT (305 MM) FROM A VERTICAL SURFACE. ABS AND PVC PIPING EXPOSED TO SUNLIGHT SHALL BE PROTECTED BY WATER BASED SYNTHETIC LATEX PAINTS.

CPC-906.2-EACH VENT SHALL TERMINATE NOT LESS THAN 10 FEET (3048 MM) FROM, OR NOT LESS THAN 3 FEET (914 MM) ABOVE, AN OPENABLE WINDOW, DOOR, OPENING, AIR INTAKE, OR VENT SHAFT, OR NOT LESS THAN 3 FEET (914MM) IN EVERY DIRECTION FROM A LOT LINE, ALLEY AND STREET EXCEPTED.

CPC-707.4-1- EACH HORIZONTAL DRAINAGE PIPE SHALL BE PROVIDED WITH A CLEANOUT AT ITS UPPER TERMINAL. EXCEPTIONS:
1-CLEANOUTS SHALL BE PERMITTED TO BE OMITTED ON A HORIZONTAL DRAIN LINE LESS THAN 5 FEET IN LENGTH UNLESS SUCH LINE IS SERVING SINKS OR URINALS.
2- EACH RUN OF PIPING, THAT IS MORE THAN 100 FEET IN TOTAL DEVELOPED LENGTH.
3-A CLEANOUT SHALL BE PROVIDED IN A DRAINAGE LINE FOR EACH AGGREGATE HORIZONTAL CHANGE IN DIRECTION EXCEEDING 135 DEGREES.
4- A CLEANOUT SHALL BE INSTALLED ABOVE THE FIXTURE CONNECTION FITTING, SERVING EACH URINAL, REGARDLESS OF THE LOCATION OF THE URINAL IN THE BUILDING.

CPC-707.8-EACH CLEANOUT, UNLESS INSTALLED UNDER AN APPROVED COVER PLATE, SHALL BE ABOVE GRADE, READILY ACCESSIBLE, AND SO LOCATED AS TO SERVE THE PURPOSE FOR WHICH IT IS INTENDED. CLEANOUTS LOCATED UNDER COVER PLATES SHALL BE SO INSTALLED AS TO PROVIDE THE CLEARANCES AND ACCESSIBILITY REQUIRED BY THIS SECTION.

CPC-707.9-EACH CLEANOUT IN PIPING 2 INCHES (50MM OR LESS IN SIZE SHALL BE SO INSTALLED THAT THERE IS A CLEARANCE OF NOT LESS THAN 18 INCHES (457 MM) BY 18 INCHES (457 MM IN FRONT OF THE CLEANOUT. CLEANOUTS IN PIPING EXCEEDING 2 INCHES (50 MM) SHALL HAVE A CLEARANCE OF NOT LESS THAN 24 INCHES (610 MM) BY 24 INCHES (610 MM) IN FRONT OF THE CLEANOUT.

CPC-418.3-FLOOR DRAINS SHALL BE INSTALLED IN THE FOLLOWING AREAS:
1) TOILET ROOMS CONTAINING TWO OR MORE WATER CLOSETS OR A COMBINATION OF ONE WATER CLOSET AND ONE URINAL, EXCEPT IN A DWELLING UNIT.
2) COMMERCIAL KITCHENS AND IN ACCORDANCE WITH SECTION 704.3.
3) LAUNDRY ROOMS IN COMMERCIAL BUILDINGS AND COMMON LAUNDRY FACILITIES IN MULTI-FAMILY DWELLING BUILDINGS.
4) BOILER ROOMS.

CPC-909.1-TRAPS FOR ISLAND SINKS AND SIMILAR EQUIPMENT SHALL BE ROUGHED IN ABOVE THE FLOOR AND SHALL BE PERMITTED TO BE VENTED BY EXTENDING THE VENT AS HIGH AS POSSIBLE, BUT NOT LESS THAN THE DRAINBOARD HEIGHT AND THEN RETURNING IT DOWNWARD AND CONNECTING IT TO THE HORIZONTAL SINK DRAIN IMMEDIATELY DOWNSTREAM FROM THE VERTICAL FIXTURE DRAIN. THE RETURN VENT SHALL BE CONNECTED TO THE HORIZONTAL DRAIN THROUGH A WYE-BRANCH FITTING AND SHALL, IN ADDITION, BE PROVIDED WITH A FOOT VENT TAKEN OFF THE VERTICAL FIXTURE VENT BY MEANS OF A WYE BRANCH IMMEDIATELY BELOW THE FLOOR AND EXTENDING TO THE NEAREST PARTITION AND THEN THROUGH THE ROOF TO THE OPEN AIR, OR SHALL BE PERMITTED TO BE CONNECTED TO OTHER VENTS AT A POINT NOT LESS THAN 6 INCHES (152 MM) ABOVE THE FLOOD-LEVEL RIM OF THE FIXTURES SERVED

HOT WATER INSULATION SCHEDULE

SYSTEM	OPERATING TEMPERATURE	INSULATION TYPE	PIPE SIZE	INSULATION THICKNESS
-DOMESTIC HW -HOT WATER REC. (ABOVE GRADE)	105 °F - 140 °F	GLASS FIBER	1/2"	1/2"
			3/4"	1"
			1" TO 1-1/2"	1-1/2"
			2" & ABOVE	2"

GAS CODE NOTES

CMC-1308.6.1- GAS METERS SHALL BE LOCATED IN VENTILATED SPACES READILY ACCESSIBLE FOR EXAMINATION, READING, REPLACEMENT, OR NECESSARY MAINTENANCE. [NFPA 54:5.7.2.1]

CMC-1308.6.1.1- GAS METERS SHALL NOT BE PLACED WHERE THEY WILL BE SUBJECTED TO DAMAGE, SUCH AS ADJACENT TO A DRIVEWAY, UNDER A FIRE ESCAPE, IN PUBLIC PASSAGES, HALLS, OR WHERE THEY WILL BE SUBJECT TO EXCESSIVE CORROSION OR VIBRATION. [NFPA 54:5.7.2.2]

CMC-1308.6.1.2- GAS METERS SHALL NOT BE LOCATED WHERE THEY WILL BE SUBJECTED TO EXTREME TEMPERATURES OR SUDDEN EXTREME CHANGES IN TEMPERATURE OR IN AREAS WHERE THEY ARE SUBJECTED TO TEMPERATURES BEYOND THOSE RECOMMENDED BY THE MANUFACTURER. [NFPA 54:5.7.2.3]

CMC 1310.3.3-GAS PIPING TO BE SLOPED PIPING FOR OTHER THAN DRY GAS CONDITIONS SHALL BE SLOPED NOT LESS THAN 1/4 INCH IN 15 FEET (1.4 MM/M) TO PREVENT TRAPS. [NFPA 54:7.2.4]

CMC-1310.3-PIPING INSTALLED ABOVEGROUND SHALL BE SECURELY SUPPORTED AND LOCATED WHERE IT WILL BE PROTECTED FROM PHYSICAL DAMAGE. WHERE PASSING THROUGH AN EXTERIOR WALL, THE PIPING SHALL ALSO BE PROTECTED FROM CORROSION BY COATING OR WRAPPING WITH AN INERT MATERIAL APPROVED FOR SUCH APPLICATIONS. THE PIPING SHALL BE SEALED AROUND ITS CIRCUMFERENCE AT THE POINT OF THE EXTERIOR PENETRATION TO PREVENT THE ENTRY OF WATER, INSECTS, AND RODENTS. WHERE PIPING IS ENCASED IN A PROTECTIVE PIPE SLEEVE, THE ANNULAR SPACES BETWEEN THE GAS PIPING AND THE SLEEVE AND BETWEEN THE SLEEVE AND THE WALL OPENING SHALL BE SEALED. [NFPA 54:7.2.1]

CMC 1310.3.1 PROTECTIVE COATING WHERE PIPING IS IN CONTACT WITH A MATERIAL OR AN ATMOSPHERE CORROSIVE TO THE PIPING SYSTEM, THE PIPING AND FITTINGS SHALL BE COATED WITH A CORROSION-RESISTANT MATERIAL. ANY SUCH COATING USED ON PIPING OR COMPONENTS SHALL NOT BE CONSIDERED AS ADDING STRENGTH TO THE SYSTEM. [NFPA 54:7.2.2]

CMC 1310.3.2 BUILDING STRUCTURE THE INSTALLATION OF GAS PIPING SHALL NOT CAUSE STRUCTURAL STRESSES WITHIN BUILDING COMPONENTS TO EXCEED ALLOWABLE DESIGN LIMITS. APPROVAL SHALL BE OBTAINED BEFORE ANY BEAMS OR JOISTS ARE CUT OR NOTCHED. [NFPA 54:7.2.3.1 -7.2.3.2]

CMC-1312.6-EACH APPLIANCE CONNECTED TO A PIPING SYSTEM SHALL HAVE AN ACCESSIBLE, APPROVED MANUAL SHUTOFF VALVE WITH A NON-DISPLACEABLE VALVE MEMBER, OR A LISTED GAS CONVENIENCE OUTLET. APPLIANCE SHUTOFF VALVES AND CONVENIENCE OUTLETS SHALL SERVE A SINGLE APPLIANCE ONLY. [NFPA 54:9.6.5] THE SHUTOFF VALVE SHALL BE LOCATED WITHIN 6 FEET (1829 MM) OF THE APPLIANCE IT SERVES. [NFPA 54:9.6.5.1] WHERE A CONNECTOR IS USED, THE VALVE SHALL BE INSTALLED UPSTREAM OF THE CONNECTOR. A UNION OR FLANGED CONNECTION SHALL BE PROVIDED DOWNSTREAM FROM THE VALVE TO PERMIT REMOVAL OF APPLIANCE CONTROLS. [NFPA 54:9.6.5.1(A)]

EXCEPTIONS:

- SHUTOFF VALVES SERVING DECORATIVE APPLIANCES IN A FIREPLACE SHALL NOT BE LOCATED WITHIN THE FIREPLACE FIREBOX EXCEPT WHERE THE VALVE IS LISTED FOR SUCH USE. [NFPA 54:9.6.5.1(B)].
- SHUTOFF VALVES SHALL BE PERMITTED TO BE ACCESSIBLY LOCATED INSIDE WALL HEATERS AND WALL FURNACES LISTED FOR RECESSED INSTALLATION WHERE NECESSARY MAINTENANCE IS PERFORMED WITHOUT REMOVAL OF THE SHUTOFF VALVE.

ALL EXPOSED GAS PIPING SHALL BE PROTECTED AGAINST CORROSION BY COATING OR WRAPPING WITH AN INERT MATERIAL APPROVED FOR SUCH APPLICATIONS.

ALL EXPOSED GAS PIPING SHALL BE KEPT AT LEAST SIX (6) INCHES ABOVE GRADE.

CMC-902.14-WHERE THE GAS SUPPLY PRESSURE IS HIGHER THAN THAT AT WHICH THE APPLIANCE IS DESIGNED TO OPERATE OR VARIES BEYOND THE DESIGN PRESSURE LIMITS OF THE APPLIANCE, A GAS APPLIANCE PRESSURE REGULATOR SHALL BE INSTALLED. [NFPA 54:9.1.18]

CMC 1310.1.1 COVER REQUIREMENTS UNDERGROUND PIPING SYSTEMS SHALL BE INSTALLED WITH A MINIMUM OF 12 INCHES (305 MM) OF COVER. THE MINIMUM COVER SHALL BE INCREASED TO 18 INCHES (457 MM) IF EXTERNAL DAMAGE TO THE PIPE OR TUBING FROM EXTERNAL FORCES IS LIKELY TO RESULT. WHERE A MINIMUM OF 12 INCHES (305 MM) OF COVER CANNOT BE PROVIDED, THE PIPE SHALL BE INSTALLED IN CONDUIT OR BRIDGED (SHIELDED).

CMC 1310.1.2 TRENCHES THE TRENCH SHALL BE GRADED SO THAT THE PIPE HAS A FIRM, SUBSTANTIALLY CONTINUOUS BEARING ON THE BOTTOM OF THE TRENCH. [NFPA 54:7.1.2.2]

TESTING PROCEDURE OF GAS SYSTEMS SHOULD BE PERFORMED AS PER CPC SEC. 1213.3.

JG
DESIGN · BUILD

Seal

REGISTERED PROFESSIONAL ENGINEER
JAMES E AUSTIN
4782
STRUCTURAL
STATE OF CALIFORNIA

3/28/2025

TO THE BEST OF MY KNOWLEDGE, THE BUILDING DESIGN PLANS AND SPECIFICATIONS COMPLY WITH FLORIDA BUILDING CODE

NOT FOR CONSTRUCTION

PLUMBING REQUIREMENTS & CODE ANALYSIS

scale:

drawn by:

checked by:

date:

project number:

P-02

WATER SUPPLY FIXTURE LOADS

FROM 2022 CPC - TABLE 610.3:
WATER SUPPLY FIXTURE UNITS LOADS:

FIXTURE	W.S.F.U	QTY.	TOTAL W.S.F.U
WATER CLOSET	2.5	2	5.0
LAVATORY	1.0	2	2.0
SHOWER	2.0	0	0
KITCHEN SINK	1.5	1	1.5
DISH WASHER	1.5	1	1.5
LAUNDRY	1.5	1	1.5
BATHTUB	4.0	2	8.0
BIDET	1.0	0	0
TOTAL PROJECT WSFU =			**19.5**

PER 2022 CPC - TABLE 610.4:
- THE LONGEST RUN IS APPROX. 150 FT.
- FOR W/M PRESSURE RANGE OVER 60 PSI,
- **THE MAIN CWP TO BE NOT LESS THAN 1"**
- **W/M NOT LESS THAN 1"**

DRAINAGE FIXTURE LOADS

FROM 2022 CPC - TABLE 702.1:
DRAINAGE FIXTURE UNIT VALUES (DFU)

FIXTURE	D.F.U	QTY.	TOTAL D.F.U
WATER CLOSET	3.0	2	6.0
LAVATORY	2.0	2	4.0
SHOWER	2.0	0	0
KITCHEN SINK	2.0	1	2.0
DISH WASHER	2.0	1	2.0
LAUNDRY	2.0	1	2.0
BATHTUB	2.0	2	4.0
BIDET	2.0	0	0
TOTAL PROJECT DFU =			**20.0**

GAS LOADS

GAS LOADS TABLE:

ITEM	QTY	U. k BTU	T. k BTU
KITCHEN RANGE	1	60	60
WALL HEATER	1	35	35
WATER HEATER	1	199.9	199.9
TOTAL GAS LOAD =			**294.9**

- ALL GAS PIPES MATERIAL ARE SEMI RIGID COPPER
- THE TOTAL GAS PIPE LENGTH FROM GAS METER TO THE FARTHEST EQUIPMENT IS APPRX. 60 FEET.

PLUMBING FIXTURES & EQUIPMENT SCHEDULES

Plumbing Fixtures Schedule

Fixture ID	Fixture	Manufacturer	Model	SW	V	CW	HW	Description
WCFT-1	Water Closet - Flush Tank	American Standard	Townsend Vormax	3"	2"	1/2"	-	High Efficiency, Ultra Low Consumption (1.28 GPF). Meets EPA WaterSense
SB-1	Shower Base	American Standard	Studio	2"	1-1/2"	-	-	60"x30"x2-1/2", Brushed Stainless Steel Drain Plate Meets CSA B45.5 / IAPMO Z124
BB-1	Bathtub Base	American Standard	Everclean	2"	1-1/2"	-	-	66"x36"x22-1/2", Brushed Stainless Steel Drain Plate Meets UL 1795, ANSI Z124.1, ASTM E162 & NFPA 258
RL-1	Residential Lavatory	American Standard	Edgemere	1-1/4" Trap	1-1/2"	-	-	Under counter Sink, Front Overflow, Meets ASME A112.19
RKS-1	Residential Kitchen Sink	American Standard	Pekoe	2"	1-1/2"	-	-	Double Bowl Stainless Steel Kitchen Sink Meets ASME A112.19.3

SCHEDULE No. 1
GAS WATER HEATER SCHEDULE (OR APPROVED EQUAL)

TAG		WH-01
LOCATION		LAUNDRY
MANUFACTURER		NAVIEN
MODEL		NPE-240A2
HEATING CAPACITY		13,300-199,900 BTU/H
EFFICIENCY RATINGS		0.95
FLOW RATE(DHW)	35° F TEMP RISE	11.2 GPM
	45° F TEMP RISE	8.7 GPM
	67° F TEMP RISE	5.6 GPM
DIMENSIONS		17.3"W x 27.4" H x13.2" D
BOILER WEIGHT		77 LBS
CONNECTION SIZE:	COLD WATER INLET	3/4"
	HOT WATER INLET	3/4"
	GAS INLET	3/4"
	RECIRCULATION INLET	3/4"
POWER SUPPLY		120 V AC, 60HZ
VENTING	EXHAUST	2" OR 3" PVC
	INTAKE	2" OR 3" PVC
	VENT CLEARANCES	0" TO COMBUSTIBLES

PLUMBING GENERAL DETAILS

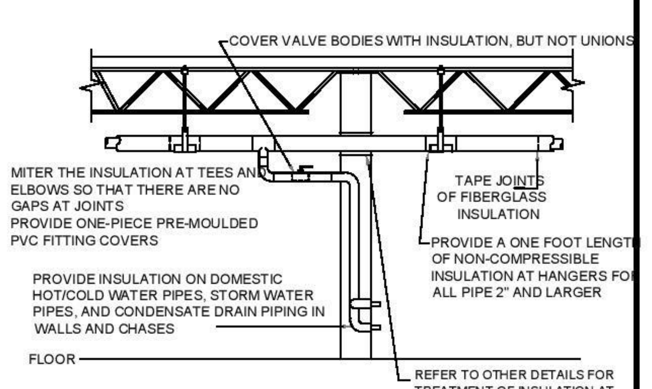

PROVIDE FIBERGLASS INSULATION WITH ALL-SERVICE JACKET WITH VAPOR BARRIER ON ALL COLD/HOT WATER PIPING AND CONDENSATE DRAIN PIPE REFER TO SPECIFICATIONS FOR FURTHER INFORMATION REGARDING INSULATION INSTALL ALL ITEMS PER SPECIFICATIONS AND MANUFACTURERS INSTRUCTIONS MAINTAIN VAPOR BARRIER ON COLD PIPING BY MEANS OF SEALANT AND TAPE FLAME-SPREAD AND SMOKE-DEVELOPED INDEXES SHALL NOT EXCEED 25/50 SEAL EXPOSED ENDS OF FIBERGLASS INSULATION WITH ADHESIVE MASTIC

PIPE INSULATION DETAIL — SCALE NONE — 1

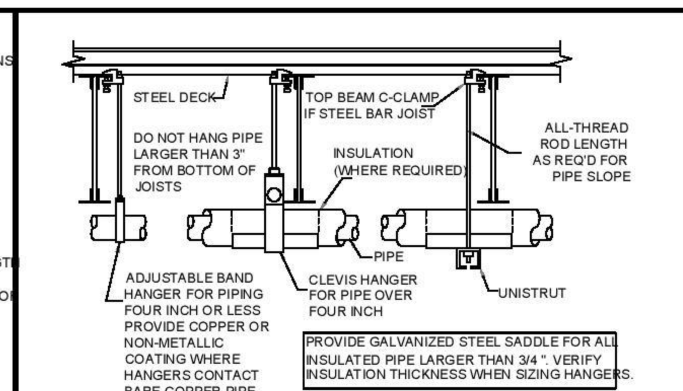

PROVIDE UPPER ATTACHMENT AS REQUIRED FOR CASES NOT SHOWN HERE. DO NOT INSTALL HANGER INSIDE INSULATION OR OTHERWISE PENETRATE VAPOR BARRIER. DO NOT HANG ONE PIPE FROM ANOTHER EXCEPT IN CHASES. TRAPEZE HANGERS MAY BE USED FOR MUL PLE PARALLEL PIPES. HANGER SPACING FOR PIPE SIZE: COPPER: 4"=12'-0"; 3"=11'-0"; "=10'-0"; 2"=9'-0"; 1½"=8'-0"; 1¼"=7'-0"; 1" & "=6'-0"; ½"=5'-0". CAST IRON: 10'-0" AND 0NE NEAR ALL JOINTS. STEEL: 4"=14'-0"; 3"=12'-0"; 2½"=11'-0"; 2"=10'-0"; 1½"=9'-0"; 1"=7'-0"; "=6'-0"; ½=5'-0". LOCATE HANGERS AS CLOSE AS POSSIBLE TO TURNS AND TEES OF PIPE. PROVIDE SUPPLEMENTARY STEEL STRUTS BETWEEN JOISTS IF REQUIRED. LOCATE HANGERS TO TAKE LOAD OFF OF EQUIPMENT CONNECTIONS. ANCHOR WATER PIPE AGAINST SWAYING DUE TO CHANGES IN WATER VELOCITY. PROVIDE SEISMIC BRACING IF/AS REQUIRED BY LOCAL AUTHORITIES. CHAINS OR PERFORATED STRAP IRON OR STEEL IS NOT ACCEPTABLE. REFER TO CODES FOR FURTHER INFORMATION.

PIPE HANGERS DETAIL — SCALE NONE — 2

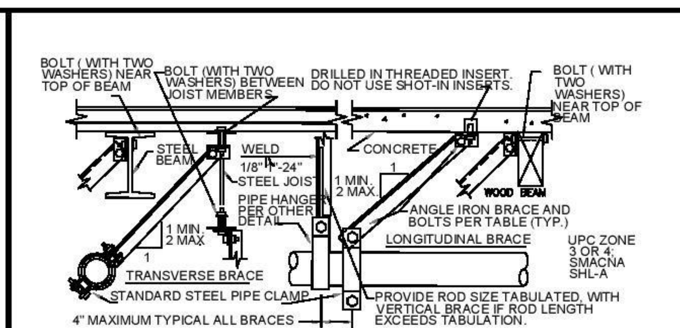

PIPE SIZE	SPACING TR.	SPACING LO.	TRANSVERSE BRACE	LONGITUDINAL BRACE	BOLT SIZE	ROD SIZE	MAX ROD LENGTH	VERTICAL BRACE
1" TO 2"	20'	20'	2"x2"x18GA	2"x2"x18GA	1/4"	3/8"	20"	2"x2"x18GA
2-1/2" TO 3"	40'	40'	2-1/2x2-1/2x16GA	2-1/2x2-1/2x16GA	3/8"	1/2"	25"	2"x2"x16GA
4" TO 5"	40'	40'	2-1/2x2-1/2x16GA	2-1/2x2-1/2x12GA	1/2"	5/8"	31"	2"x2"x16GA
6"	40'	40'	2-1/2x2-1/2x12GA	2-1/2x2-1/2x12GA	1/2"	3/4"	37"	2-1/2x2-1/2x16GA
8"	40'	40'	2-1/2x2-1/2x12GA	2-1/2x2-1/2x12GA	5/8"	7/8"	43"	2-1/2x2-1/2x12GA

DO NOT BRACE ANY PIPES WHERE TOP PF PIPE TO BOTTOM OF UPPER ATTACHMENT IS LESS THAN 12". BRACE GAS, OIL, AND AIR PIPES 1" AND LARGER. BRACE ALL PIPES IN EQUIPMENT ROOMS 1-1/4" AND LARGER. BRACE ALL OTHER PIPE 2-1/2" AND LARGER. BRACE HUBLESS CAST IRON PIPE ON EACH SIDE OF ANY CHANGE IN DIRECTION OF 90 DEGREES OR MORE. MAXIMUM HANGER ROD LENGTH IS 6 FEET. WHERE LENGTH OF RUN EXCEEDS LONGITUDINAL BRACE SPACING, PROVIDE 2 FEET OFFSET IN PIPE AND LOCATE BRACE AT MID RUNS. REFER TO CURRENT EDITION OF SMACNA"SEISMIC RESTRAINT MANUAL" FOR ALTERNATIVE ATTACHMENTS AND ADDITIONAL INFORMATION AND REQUIREMENTS. (THIS DETAIL APPLIES IN THE ABSENCE OF OTHER LOCAL CODE REQUIREMENTS.)

SEISMIC BRACING FOR PIPE — SCALE NONE — 3

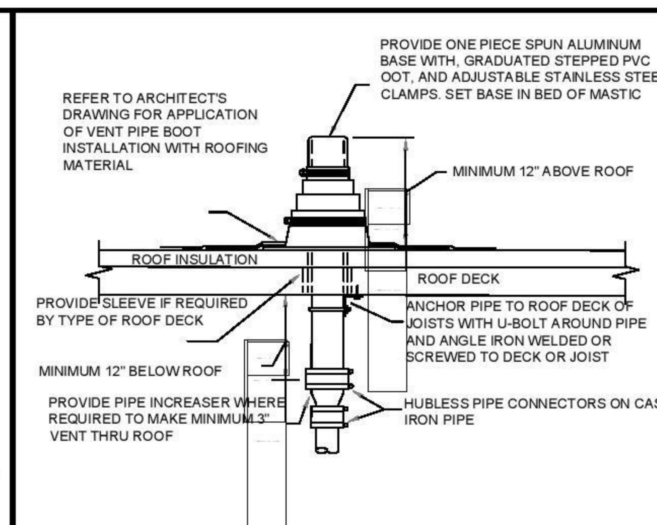

REFER TO PLANS FOR VTR PIPE SIZES AND LOCATIONS. LOCATE VTR A MINIMUM OF 20 FEET HORIZONTAL (UNLESS APPROVED BY ENGINEER PRIOR TO INSTALLATION) OR THREE FEET VERTICAL ABOVE ANY BUILDING OPENING OR FRESH AIR INTAKE, AND ONE FOOT FROM ANY VERTICAL SURFACE. PROVIDE 1" FIBERGLASS INSULATION WITH ALL -SERVICE JACKET ON VENT PIPE INSIDE BUILDING WITHIN SIX FEET OF VENT THRU ROOF LOCATION. VERIFY FLASHING AND COUNTERFLASHING WITH ROOFING CONTRACTOR.

VENT THROUGH ROOF DETAIL — SCALE NONE — 4

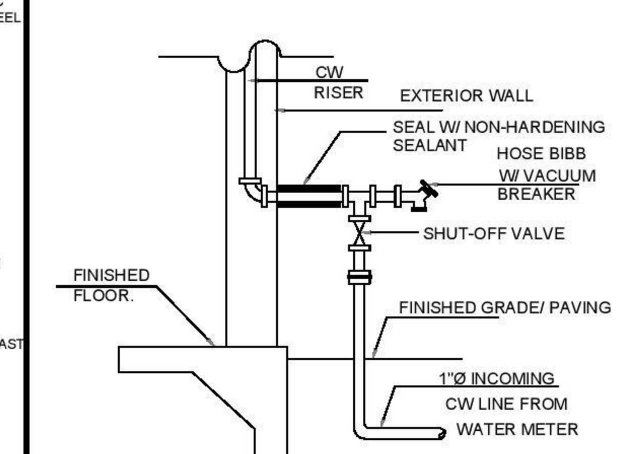

WATER ENTRY DETAIL — SCALE NONE — 5

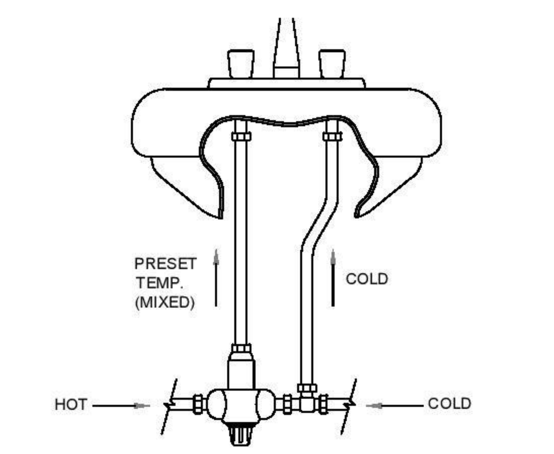

ANTI-SCALD MIXING VALVE — SCALE NONE — 6

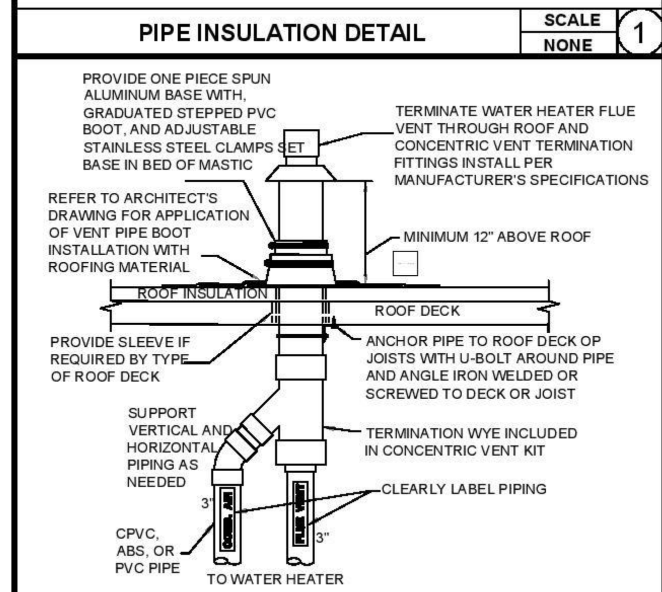

- REFER TO PLANS FOR WATER HEATER FLUE VENT PIPE SIZES AND LOCATIONS.
- LOCATE CONCENTRIC VENT A MINIMUM OF 10 FEET HORIZONTAL (UNLESS APPROVED BY ENGINEER PRIOR TO INSTALLATION) AND ONE FOOT FROM ANY VERTICAL SURFACE
- VERIFY FLASHING AND COUNTERFLASHING WITH ROOFING CONTRACTOR.

CONCENTRIC VENT DETAIL — SCALE NONE — 7

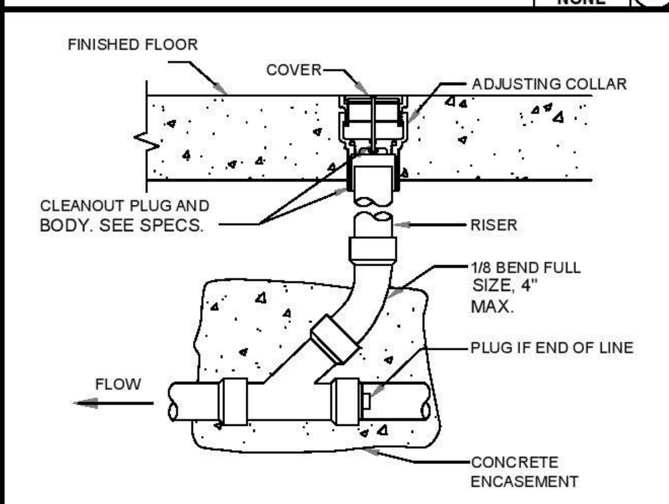

NOTE:
CLEAN-OUT COVER FLUSH WITH TILE OR WITH CONCRETE FLOOR IN AREA FLUSH WITH NO TILE.

FLOOR CLEAN-OUT DETAIL — SCALE NONE — 8

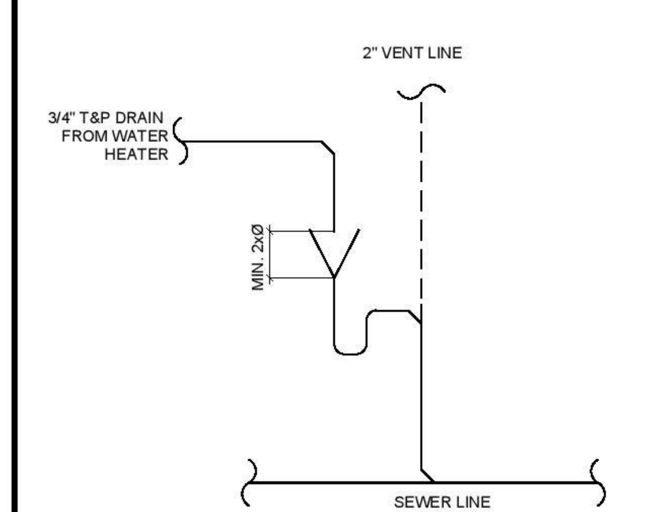

T&P DRAIN CONNECTION — SCALE NONE — 9

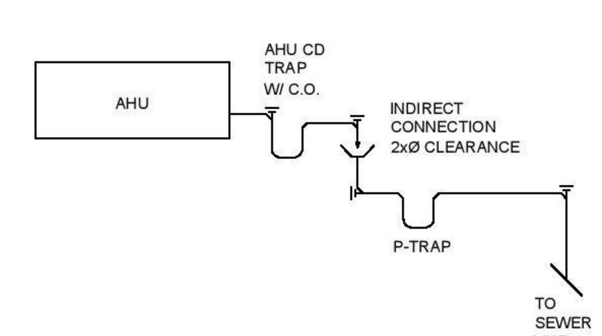

AHU CONDENSATE DRAIN DETAIL — SCALE NONE — 10

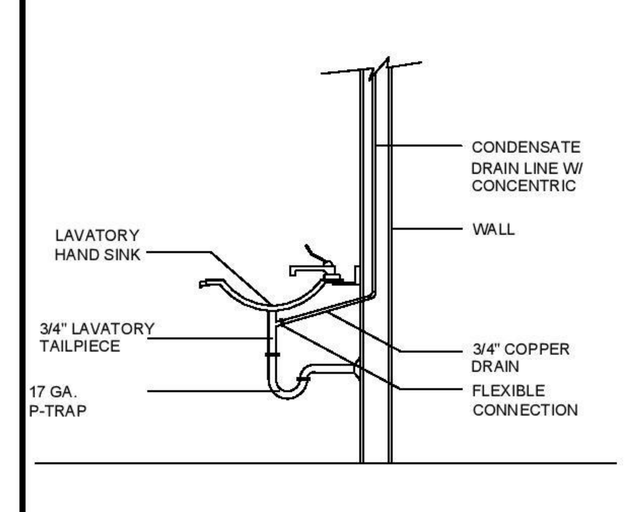

CONDENSATE INTO TAILPIECE DETAIL — SCALE NONE — 11

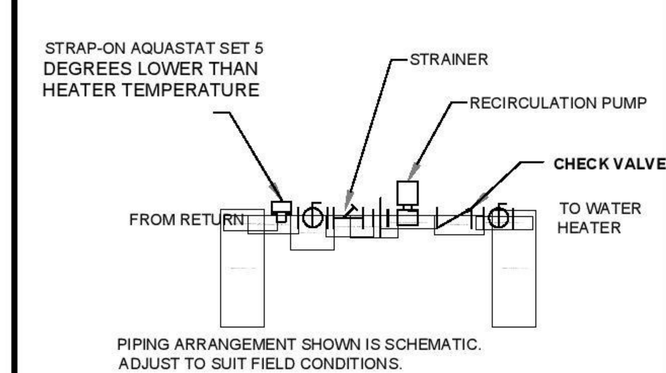

PIPING ARRANGEMENT SHOWN IS SCHEMATIC. ADJUST TO SUIT FIELD CONDITIONS.

RE-CIRCULATION PUMP — SCALE NONE — 12

Seal

3/28/2025

TO THE BEST OF MY KNOWLEDGE, THE BUILDING DESIGN PLANS AND SPECIFICATIONS COMPLY WITH FLORIDA BUILDING CODE

NOT FOR CONSTRUCTION

PLUMBING CALCULATIONS, SCHEDULES & GENERAL DETAILS

scale:
drawn by:
checked by:
date:
project number:

P-03

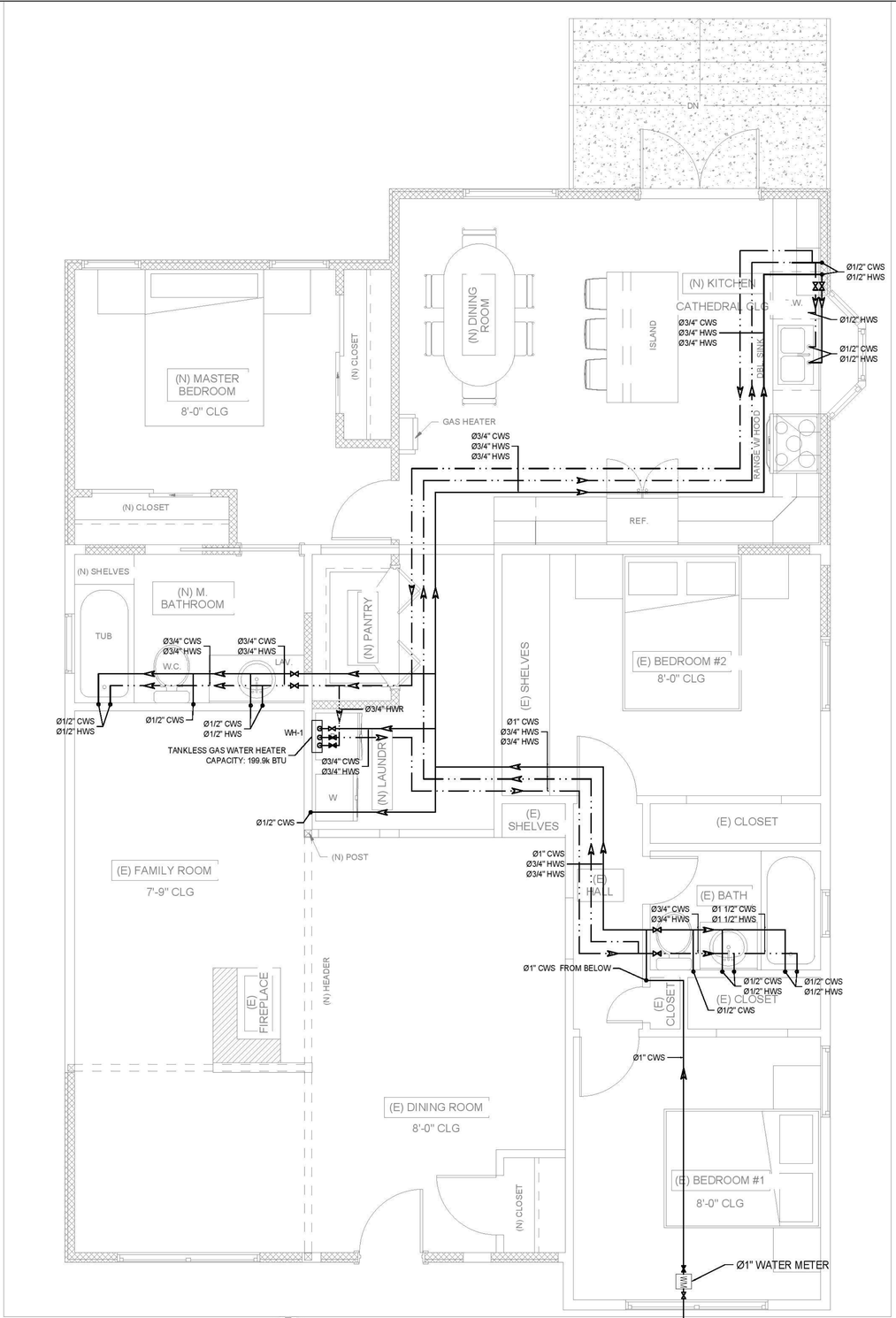

1 P-04 WATER SUPPLY PLAN
SCALE: 3/8"=1'-0"

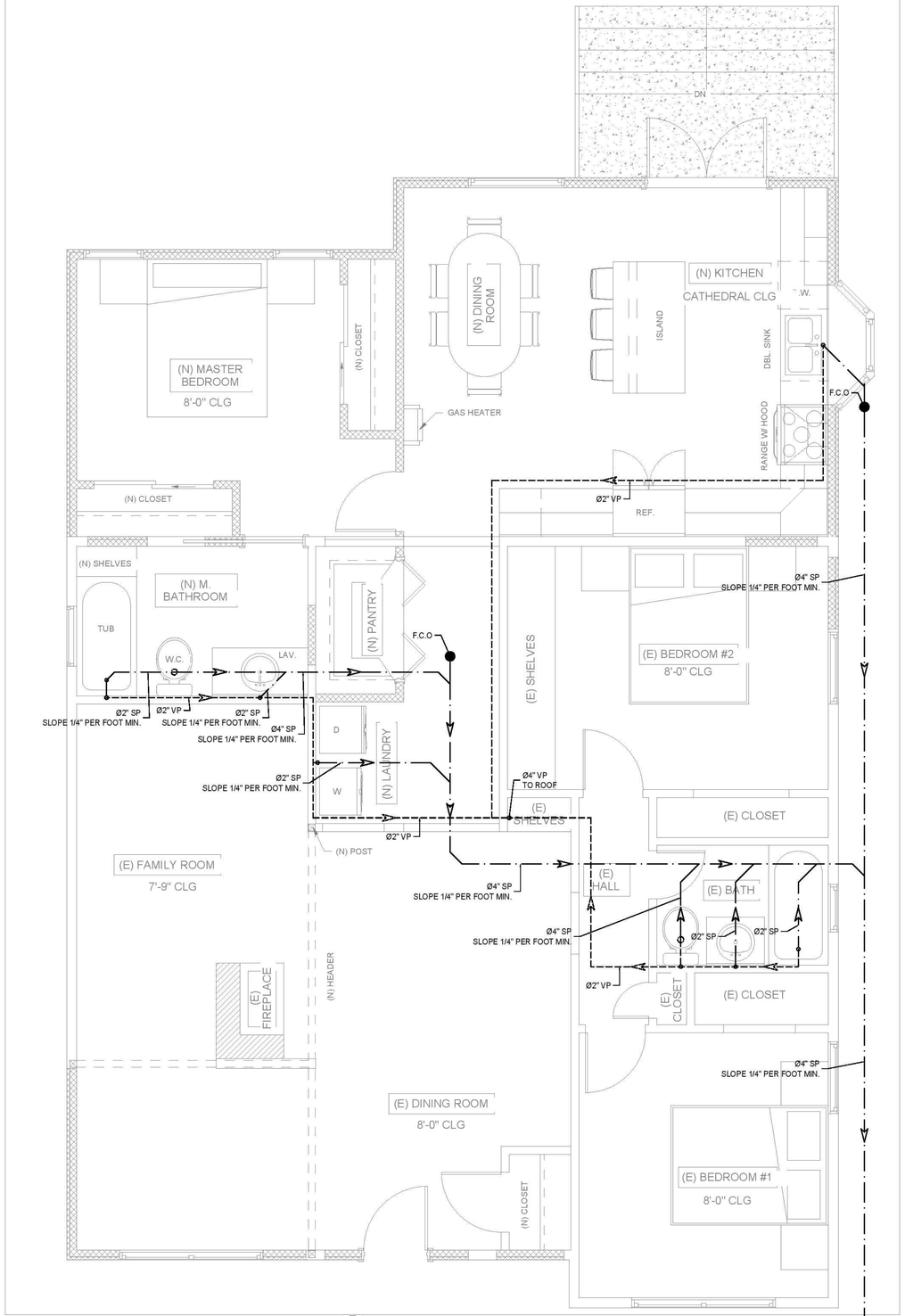

1 P-04 SEWAGE PLAN
SCALE: 3/8"=1'-0"

JG DESIGN · BUILD

Seal

REGISTERED PROFESSIONAL ENGINEER
JAMES E AUSTIN
4782
STRUCTURAL
STATE OF CALIFORNIA
3/28/2025

TO THE BEST OF MY KNOWLEDGE, THE BUILDING DESIGN PLANS AND SPECIFICATIONS COMPLY WITH FLORIDA BUILDING CODE

NOT FOR CONSTRUCTION

PLUMBING PLAN

scale:
drawn by:
checked by:
date:
project number:

P-04

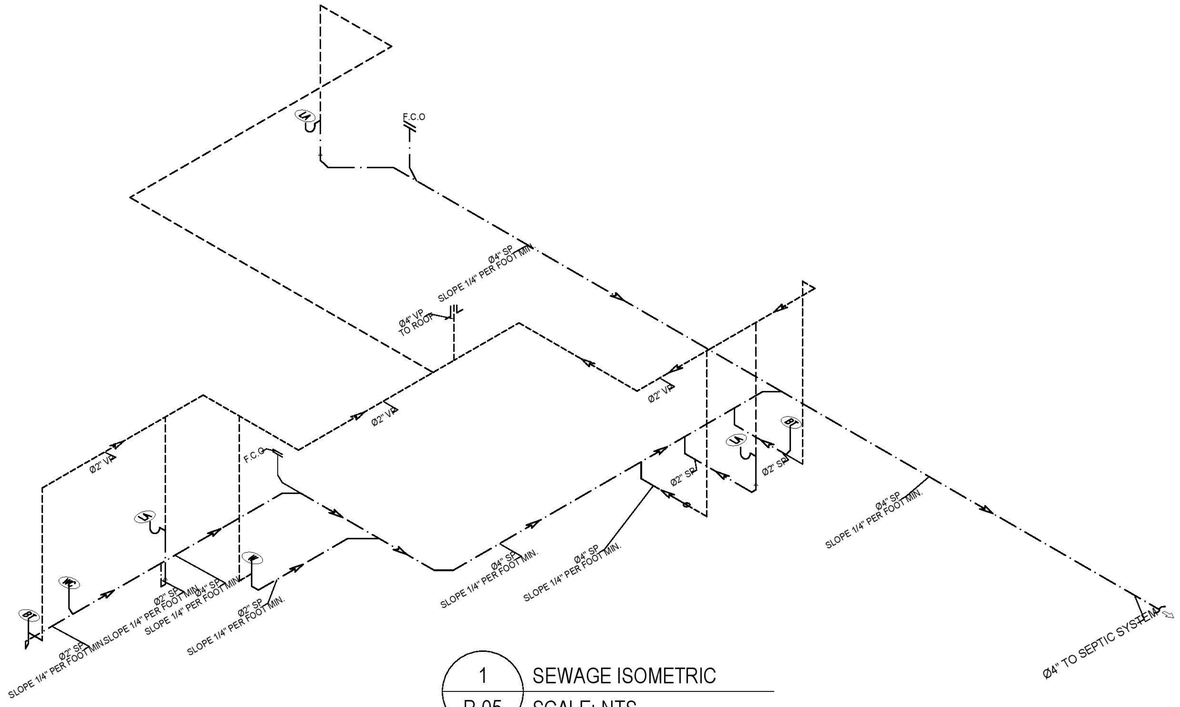

1 P-05 SEWAGE ISOMETRIC
SCALE: NTS

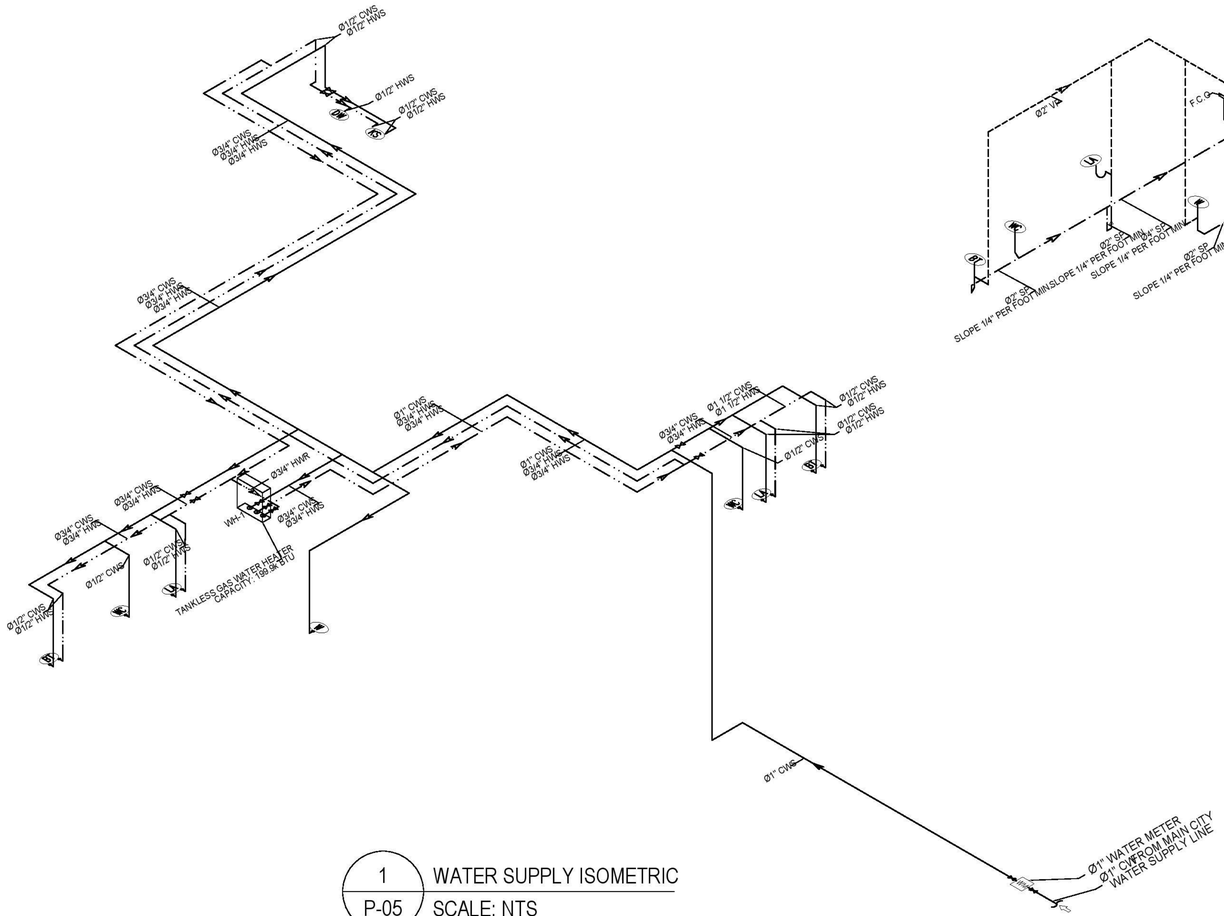

1 P-05 WATER SUPPLY ISOMETRIC
SCALE: NTS

JG
DESIGN · BUILD

Seal

REGISTERED PROFESSIONAL ENGINEER
JAMES E AUSTIN
4782
STRUCTURAL
STATE OF CALIFORNIA

3/28/2025

TO THE BEST OF MY KNOWLEDGE, THE BUILDING DESIGN PLANS AND SPECIFICATIONS COMPLY WITH FLORIDA BUILDING CODE

NOT FOR CONSTRUCTION

PLUMBING ISOMETRIC

scale:
drawn by:
checked by:
date:
project number:

P-05

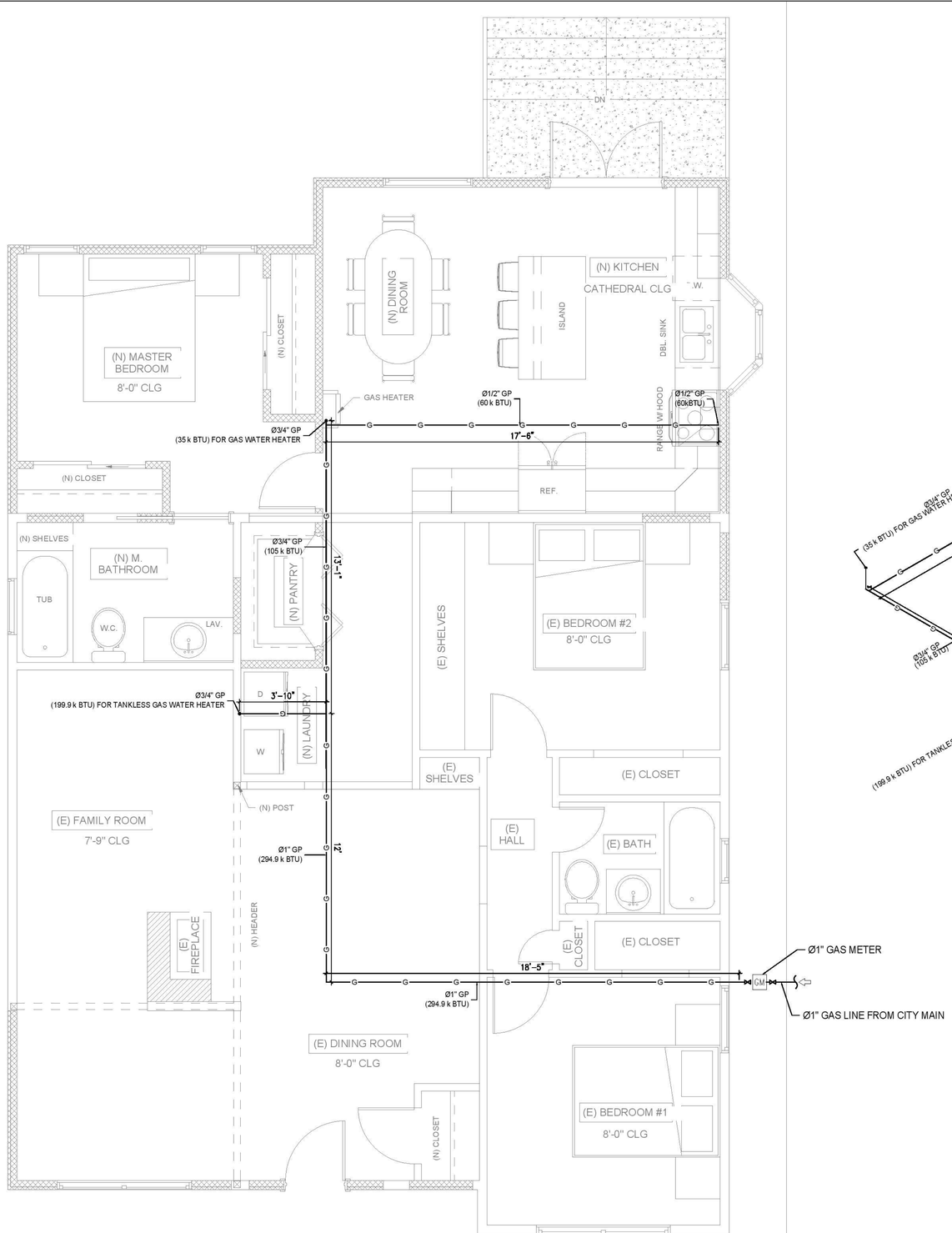

1 P-06 GAS SUPPLY PLAN
SCALE: 3/8"=1'-0"

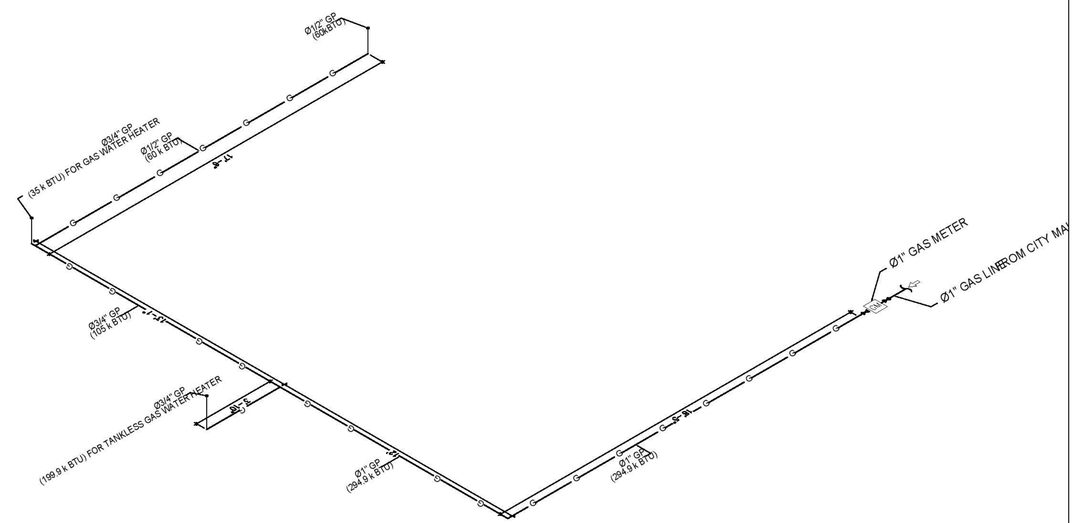

1 P-06 GAS SUPPLY ISOMETRIC
SCALE: NTS

JG DESIGN · BUILD

Seal

REGISTERED PROFESSIONAL ENGINEER
JAMES E AUSTIN
4782
STRUCTURAL
STATE OF CALIFORNIA

3/28/2025

TO THE BEST OF MY KNOWLEDGE, THE BUILDING DESIGN PLANS AND SPECIFICATIONS COMPLY WITH FLORIDA BUILDING CODE

NOT FOR CONSTRUCTION

PLUMBING ISOMETRIC

scale:
drawn by:
checked by:
date:
project number:

P-06

P

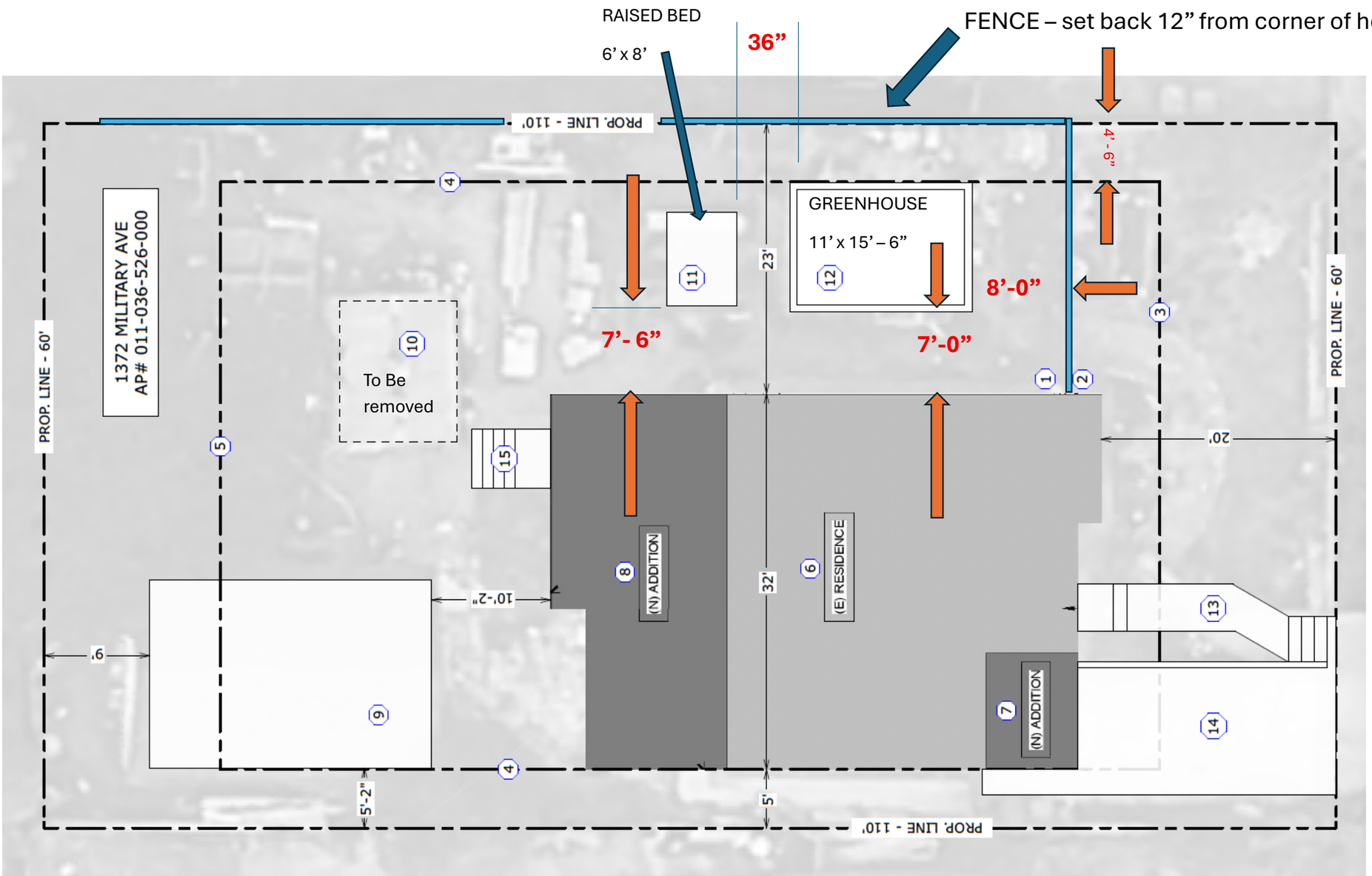

JIM GISH, INC.

BASSETT

1372 Military Ave, Seaside, CA 93955, USA

Seal

SUPPLEMENTAL INFORMATION

PAGE A-0

SITE PLAN

07.29.2025

Location Map: 1372 Military

Letter in Support of Use Permit Request

City of Seaside Planning Department
440 Harcourt Avenue
Seaside, CA 93955

Date: 06.18.2025

Re: Use Permit Request – Project No. 28307

Property Address: 1372 Military Avenue, Seaside, CA

Applicants: Ryan and Megan Bassett

General Contractor: Jim Gish, Inc. (CA License #857482)

Dear Planning Staff,

Summary of the Situation

- Project Address: 1372 Military Avenue, Seaside, California

- Expansion Scope: From 902 square feet to 1,425 square feet

- Parking Requirement (per SMC Table 3-8):

  - 1 covered parking space

  - 1 uncovered parking space

- Issue: The site cannot accommodate the required parking spaces without demolition and/or substantial regrading

- Requested Relief: Grant of a Use Permit under SMC §17.34.100.B.1

Legal Basis – SMC §17.34.100.B.1

Per this section of the zoning code, a Use Permit may be granted when the following conditions make strict compliance with parking requirements unreasonable:

- The location of the existing structure

- The size or topography of the parcel

- Public safety considerations

We respectfully assert that all three criteria are met in this case, as outlined below:

Location Constraint

The existing home sits within 5 feet of the side lot line on the side best suited for vehicle access. This proximity leaves no room to install an uncovered parking stall without demolishing part of the existing structure or engaging in major regrading, both of which are infeasible and inconsistent with the neighborhood's residential character.

Parcel Size / Topography

- The parcel is both small and steep.

- The home is built into the slope and sits approximately 30 inches below street level on the right side (viewed from the main entry).

- The sloping grade and narrow lot width make it physically impossible to construct code-compliant parking without significant excavation or redesign.

- A concrete retaining wall already runs parallel to the street, just inside the sidewalk, reinforcing the grade challenges.

Public Safety Considerations

- A fence along the front yard provides a necessary barrier for the family's young children, enhancing safety by preventing access to the street.

- An additional fenced area on the right side supports a shared community garden and greenhouse, used safely by both the family and neighbors.

- Adding a driveway here would eliminate this secure recreational space, creating new traffic conflict points and reducing neighborhood safety.

Attached Documentation

- Annotated site photographs showing the constraints

- Google Earth imagery highlighting setbacks, grade, and existing features

Conclusion

We are committed to improving our home while maintaining neighborhood safety and aesthetics. The strict parking requirements of SMC Table 3-8 are unreasonable as applied to our parcel due to:

- Structural proximity to lot lines

- Challenging slope and parcel configuration

- Legitimate safety needs for our children and neighborhood

We respectfully request approval of our Use Permit under SMC §17.34.100.B.1., and letters from our immediate neighbors in support of our application.

Thank you for your consideration.

Sincerely,
Ryan & Megan Bassett
1372 Military Avenue
Seaside, CA 93955

Parcel Size / Topography

- The parcel is too small and steep to accommodate parking per SMC design standards.
- Per the above photo, the home sits approximately 30" below street level on its right side (facing the main entry in this photo) and slopes down from there.
- In addition, a concrete retaining wall (A) runs parallel to the street, set back just inside the sidewalk, a fence separates the front yard from the street for the safety of the small children that call the address home, and another fence (B) on the right of the house provides another safe place for the family, and neighbors to garden (C) using raised beds and a Greenhouse, recreate and enjoy their yard.

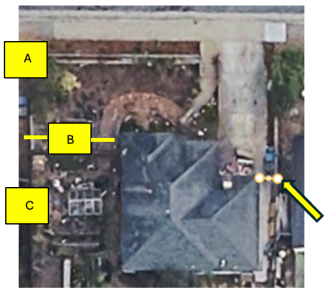

Five feet to property line on graded side.

Subject: Letter of Support for Use Permit – *1372 MILITARY AVENUE, SEASIDE, CA 93955*

To Whom It May Concern:

As a nearby resident of Megan and Ryan Bassett at the above-captioned address, I am writing in support of the applicant's request for a **Use Permit to reduce the on-site parking requirement** associated with the planned expansion of the home.

I understand that the Seaside Municipal Code now requires one covered and one uncovered parking space for single-family homes that have been expanded beyond 1,200 square feet. However, I believe the request to reduce this requirement is **reasonable and appropriate**, given the following:

- The **existing structure's location and lot constraints** make it difficult to add compliant on-site parking without significant structural or grading changes. It would require curb cuts, demolition of the sidewalks, add to noise pollution, and effectively wipe out their garden area, and a safe (off-the-street) play and recreation area for their children, and ours — as neighbors.
- There is **no adverse impact on the neighborhood**, as on-street parking in the area remains adequate and safely accessible. In fact, the single parking space they have will be used, as before the renovation, and the expansion is not for a rental unit or any additional occupants with their own vehicles.
- The proposed project maintains the residential character of the neighborhood and contributes to local housing quality.

I respectfully urge the City of Seaside to approve the Use Permit and allow the applicant to proceed with their project as proposed.

Sincerely,

Name Christopher Phares

Street Address 1364 Military Ave

Signature Chr R Phares

Date 06.15.25

Subject: Letter of Support for Use Permit – *1372 MILITARY AVENUE, SEASIDE, CA 93955*

To Whom It May Concern:

As a nearby resident of Megan and Ryan Bassett at the above-captioned address, I am writing in support of the applicant's request for a **Use Permit to reduce the on-site parking requirement** associated with the planned expansion of the home.

I understand that the Seaside Municipal Code now requires one covered and one uncovered parking space for single-family homes that have been expanded beyond 1,200 square feet. However, I believe the request to reduce this requirement is **reasonable and appropriate**, given the following:

- The **existing structure's location and lot constraints** make it difficult to add compliant on-site parking without significant structural or grading changes. It would require curb cuts, demolition of the sidewalks, add to noise pollution, and effectively wipe out their garden area, and a safe (off-the-street) play and recreation area for their children, and ours — as neighbors.
- There is **no adverse impact on the neighborhood**, as on-street parking in the area remains adequate and safely accessible. In fact, the single parking space they have will be used, as before the renovation, and the expansion is not for a rental unit or any additional occupants with their own vehicles.
- The proposed project maintains the residential character of the neighborhood and contributes to local housing quality.

I respectfully urge the City of Seaside to approve the Use Permit and allow the applicant to proceed with their project as proposed.

Sincerely,

Name FAROOQ BABRAKZAI

Street Address 1356 MILITARY AVE

Signature F Babrakzai

Date 6/14/2025

Subject: Letter of Support for Use Permit – *1372 MILITARY AVENUE, SEASIDE, CA 93955*

To Whom It May Concern:

As a nearby resident of Megan and Ryan Bassett at the above-captioned address, I am writing in support of the applicant's request for a **Use Permit to reduce the on-site parking requirement** associated with the planned expansion of the home.

I understand that the Seaside Municipal Code now requires one covered and one uncovered parking space for single-family homes that have been expanded beyond 1,200 square feet. However, I believe the request to reduce this requirement is **reasonable and appropriate**, given the following:

- The **existing structure's location and lot constraints** make it difficult to add compliant on-site parking without significant structural or grading changes. It would require curb cuts, demolition of the sidewalks, add to noise pollution, and effectively wipe out their garden area, and a safe (off-the-street) play and recreation area for their children, and ours — as neighbors.
- There is **no adverse impact on the neighborhood**, as on-street parking in the area remains adequate and safely accessible. In fact, the single parking space they have will be used, as before the renovation, and the expansion is not for a rental unit or any additional occupants with their own vehicles.
- The proposed project maintains the residential character of the neighborhood and contributes to local housing quality.

I respectfully urge the City of Seaside to approve the Use Permit and allow the applicant to proceed with their project as proposed.

Sincerely,

Name
Gary Salmeri

Street Address
1384 military ave

Signature

Date 11/14/2025

Subject: Letter of Support for Use Permit – *1372 MILITARY AVENUE, SEASIDE, CA 93955*

To Whom It May Concern:

As a nearby resident of Megan and Ryan Bassett at the above-captioned address, I am writing in support of the applicant's request for a **Use Permit to reduce the on-site parking requirement** associated with the planned expansion of the home.

I understand that the Seaside Municipal Code now requires one covered and one uncovered parking space for single-family homes that have been expanded beyond 1,200 square feet. However, I believe the request to reduce this requirement is **reasonable and appropriate**, given the following:

- The **existing structure's location and lot constraints** make it difficult to add compliant on-site parking without significant structural or grading changes. It would require curb cuts, demolition of the sidewalks, add to noise pollution, and effectively wipe out their garden area, and a safe (off-the-street) play and recreation area for their children, and ours — as neighbors.
- There is **no adverse impact on the neighborhood**, as on-street parking in the area remains adequate and safely accessible. In fact, the single parking space they have will be used, as before the renovation, and the expansion is not for a rental unit or any additional occupants with their own vehicles.
- The proposed project maintains the residential character of the neighborhood and contributes to local housing quality.

I respectfully urge the City of Seaside to approve the Use Permit and allow the applicant to proceed with their project as proposed.

Sincerely,

Name Janet Anderson

Street Address 1373 Military Ave.

Signature JAnderson

Date June 14, '25

Subject: Letter of Support for Use Permit – *1372 MILITARY AVENUE, SEASIDE, CA 93955*

To Whom It May Concern:

As a nearby resident of Megan and Ryan Bassett at the above-captioned address, I am writing in support of the applicant's request for a **Use Permit to reduce the on-site parking requirement** associated with the planned expansion of the home.

I understand that the Seaside Municipal Code now requires one covered and one uncovered parking space for single-family homes that have been expanded beyond 1,200 square feet. However, I believe the request to reduce this requirement is **reasonable and appropriate**, given the following:

- The **existing structure's location and lot constraints** make it difficult to add compliant on-site parking without significant structural or grading changes. It would require curb cuts, demolition of the sidewalks, add to noise pollution, and effectively wipe out their garden area, and a safe (off-the-street) play and recreation area for their children, and ours — as neighbors.
- There is **no adverse impact on the neighborhood**, as on-street parking in the area remains adequate and safely accessible. In fact, the single parking space they have will be used, as before the renovation, and the expansion is not for a rental unit or any additional occupants with their own vehicles.
- The proposed project maintains the residential character of the neighborhood and contributes to local housing quality.

I respectfully urge the City of Seaside to approve the Use Permit and allow the applicant to proceed with their project as proposed.

Sincerely,

Name Izabela Lesik + Matthew Tobias Fernie

Street Address 381 Military Ave, Seaside CA

Signature

Date 6/14/2025

Front view of 1372 Military showing the house drops lower than the roadway.

Front view of the house showing the driveway on the left side and its downward slope.

Four steps down from the public sidewalk into the walkway to the front door.

View from the front walkway towards the west showing the fence and pavers in the front setback.

The view through the front fence showing the drop and the area that would have to be paved over in order to construct a driveway which includes planters, a two fences, and a wire arbor.

View eastward of the front yard from the northwestern corner of the property.

CITY OF SEASIDE
STAFF REPORT

Item No.: 6.B.

TO: Planning Commission

BY: Andrew Myrick, Housing & Planning Manager

DATE: September 24, 2025

SUBJECT: **SPECIFIC PLAN AMENDMENT SPA-2025-002. A RESOLUTION RECOMMENDING THAT THE SEASIDE CITY COUNCIL APPROVE AN AMENDMENT TO THE CAMPUS TOWN SPECIFIC PLAN MODIFYING THE REVIEW PROCESSES AND SUBMITTAL REQUIREMENTS FOR DEVELOPMENT APPLICATIONS. THE PROPOSED ACTION CONSISTS OF A RECOMMENDATION ONLY AND IS THEREFORE NOT SUBJECT TO THE CALIFORNIA ENVIRONMENTAL QUALITY ACT (CEQA) PURSUANT TO SECTION 15061(b)(3) OF THE CEQA GUIDELINES.**

RECOMMENDATION

Approve the proposed Resolution recommending that the City Council adopt SPA-25-02.

BACKGROUND

The Campus Town development is located in northern Seaside. To provide for orderly development of this project, in March 2020 the Seaside City Council adopted the Campus Town Specific Plan. The Specific Plan overrides the City's Zoning Ordinance and provides for a specific development pattern within the project area consisting of approximately 1,485 residential units, 250 hotel rooms, 75 youth hostel beds, 150,000 square feet of retail/dining/entertainment uses, 50,000 square feet of office/light industrial uses, as well as parks and other amenities. Ground-breaking for the first phase of the project has already occurred and construction is expected to follow shortly.

Chapter 6 of the Specific Plan discusses the implementation of the Specific Plan.

Particularly, Section 6.3 outlines the process for the review of development applications. This process differs significantly from the "standard" review processes provided in the Zoning Ordinance. Most significantly, almost all allowed uses within the Specific Plan are ministerial in nature, which means that there are no public notifications or hearings associated with development applications within the Specific Plan. Instead, the City's Zoning Administrator is supported by a "Peer Reviewer," defined as being a licensed architect doing business within 75 miles of the City of Seaside and appointed by the Zoning Administrator to conduct a secondary review of all development applications.

While staff is supportive of the use of a ministerial process in most circumstances within the Campus Town Specific Plan area, staff also believes that the Peer Review process is unnecessary. City staff is fully qualified to conduct a ministerial (or discretionary) review of development applications, which essentially consists of verifying that the proposal complies with the requirements of the Specific Plan. Staff believes that including a secondary level of review does not create any additional benefit; however it does generate additional costs (either to the City or the applicant) to pay for the secondary review. Further, it is likely that the Peer Review process will result in minor delays in processing applications, as plans must now be reviewed by a second person. Since there are costs in money and/or time associated with the Peer Review process, and little to no benefit, staff recommends eliminating the Peer Review process and providing staff the authority to approve applications that comply with the Specific Plan. This would also align practices for ministerial permit review with those utilized in the remainder of the City.

Other changes that would be made include:

- Removing language regarding the posting of decisions in the Agenda for Zoning Administrator Hearings. As Zoning Administrator Hearings have been eliminated, this language is no longer relevant. Further, it is extremely atypical for any proactive public announcement of ministerial actions to occur.

- Modifying submittal requirements to eliminate submittals of physical material in favor of digital files.

- Consolidation of the currently-separate application completeness and compliance reviews into a single review that examines both completeness and compliance.

- Addition of language clarifying that the City Council may amend the Specific Plan via Resolution (as opposed to amendments requiring an Ordinance).

Staff's recommendation is that the Planning Commission recommend that the City Council approve the proposed changes.

The entirety of the Specific Plan may be found at the following webpage: Attachment-

5a---Campus-Town-Specific-Plan-Book.

FISCAL IMPACT

There is no fiscal impact associated with this item.

ATTACHMENTS

1. SPA-25-02 PC Resolution
2. Exhibit A - SPA-25-02 PC

RESOLUTION NO. 25-XX PC

A RESOLUTION RECOMMENDING THAT THE SEASIDE CITY COUNCIL APPROVE AN AMENDMENT TO THE CAMPUS TOWN SPECIFIC PLAN MODIFYING THE REVIEW PROCESSES AND SUBMITTAL REQUIREMENTS FOR DEVELOPMENT APPLICATIONS.

WHEREAS, in March 2020 the Seaside City Council adopted the Campus Town Specific Plan; and

WHEREAS, Chapter 6 of the Specific Plan includes provisions for the processing of land use applications; and

WHEREAS, these provisions are in many cases inconsistent and less efficient than current procedures for the processing of land use applications; and

WHEREAS, the City desires to streamline development within the Campus Town Specific Plan by reducing permit processing times; and

WHEREAS, the proposed changes to the Specific Plan would only effect processes for the review of applications and would not modify the amount, type, or style of development within the Specific Plan area; and

WHEREAS, since this action consists only of a recommendation, it is not subject to CEQA pursuant to Section 15061(b)(3) of the CEQA Guidelines.

NOW, THEREFORE, BE IT RESOLVED, THAT THE PLANNING COMMISSION HEREBY FINDS, DETERMINES, AND RESOLVES AS FOLLOWS:

1. The Planning Commission finds that: a) the facts set forth in the recitals in this Resolution are true and correct and incorporated by reference; b) the recitals constitute findings in this matter and, together with the staff report, other written reports, public testimony and other information contained in the record, are an adequate and appropriate evidentiary basis for the action taken in this Resolution; c) the provisions in this Resolution and the proposed Amendment are consistent with applicable federal and state law; and d) this Resolution will not be detrimental to the public interest, health, safety, convenience, or welfare.

2. The Planning Commission hereby recommends that the City Council adopt the attached Specific Plan Amendment as described in the attached Exhibit "A."

PASSED AND ADOPTED at a meeting of the Planning Commission of the City of Seaside, State of California, on the 24th day of September, 2025, by the following vote:

AYES:
NOES:
ABSENT:
ABSTAIN:

APPROVED:

_____
Will Silva, Chairperson

ATTEST:

_____
Andrew Myrick, Secetary

Attach:

Exhibit "A" – Specific Plan Amendment

B. *Development Standards*

The following development standards apply to the West Broadway Urban Village Specific Plan Area. They are intended to support the development of an active and lively downtown with a pedestrian-oriented mix of residential and commercial buildings that will draw visitors, shoppers and residents to the area. All new development, remodeled exteriors and new signage are subject to design review by the Board of Architectural Review (BAR). Table 7-1 lists permitted uses on ground floors and on upper floors. Except for provisions as laid out in the Specific Plan, definitions in Title 17 apply and can be found in Section 17.70 of the Municipal Code.

B.1.1 Permitted Ground Floor Uses

For development on all parcels that front onto primary streets, newly constructed buildings are required to have a mix of uses. Ground floor level retail sales and service uses or eating and drinking establishments are required for all parcels that front onto Broadway Avenue, Del Monte Boulevard and Olympia Avenue. The following uses are permitted:

B.1.1.1 Retail Sales and Services that include the following:

- **Specialty Food Retail**, including but not limited to the following: groceries/drug stores (under 15,000 square feet); coffee/tea; candy; gourmet foods; ice cream; pastry/desserts; yogurt/dairy; doughnuts/bakery; wine.
- **Specialty Goods Retail**, including but not limited to the following: cooking supplies/culinary; general housewares; decorator/art and design centers (including tile, floor and wall coverings); architectural showrooms and supplies; specialty hardware; specialty gardening supplies; antiques selling previously used, high-quality goods; party supplies; lamps and lighting; household accessories; stationery; books and magazines; musical instruments.
- **Quality Goods and Services**, including but not limited to the following: small crafts; art supplies; picture framing; specialty furniture; clothing/shoe stores; thrift/consignment stores; electronics and computers; cameras/photography service and supplies; sporting goods; outdoor/sports clothing and supplies; toys/games; cards/gifts; jewelry/watches; florists.
- **Personal Services**, including but not limited to the following: dry cleaning; shoe repair; seamstress; tailor; minor appliance repair; barber and beauty

Add Language:

Specialty Goods Retail does not include the sale of firearms or ammunition, as such sales are prohibited within the West Broadway Urban Village.

Exhibit "A"

Implementation

6.1 Purpose and Applicability

The Campus Town Specific Plan is intended to guide and regulate development within the Specific Plan Area. The Plan anticipates new development in the Specific Plan Area facilitated by a significant investment in infrastructure and public amenities. This chapter provides the framework for the development review process, including a detailed implementation program.

6.2 Specific Plan Adoption and Required Actions

This Specific Plan has been prepared and adopted in a manner consistent with California Government Code section 65451, as well as all pertinent sections of the Seaside Municipal Code. Adoption of this Specific Plan is by Ordinance (Section 65453) of the City Council.

It is anticipated that the following approvals/ actions may be required to implement the Specific Plan:

- Certification of the EIR and Adoption of the Mitigation Monitoring and Reporting Program
- Specific Plan Approval/Adoption
- Zoning Map and Text Amendment
- FORA Consistency Determination
- Vesting Tentative Map(s) and Final Map(s)
- ~~Conditional~~ Use Permit(s)
- Other Development Application Approval(s)
- Minor Deviations and/or Deviation(s)
- Improvement Plans
- Development Agreement
- Disposition and Development Agreement with Successor Agency
- Affordable Housing Plan
- Building Permits
- Grading Permits
- Tree Removal Permits
- Encroachment Permits

6.3 Development Process

This section outlines the development review and approval process for all proposed development within the Campus Town Specific Plan Area.

By approving the Campus Town Specific Plan, the City has established the legislative policies applicable to the Specific Plan Area. In order to implement those policy decisions, the City will review Development Applications for development within the Specific Plan Area pursuant to this Chapter. The scope of review of Development Applications will consist of review for substantial conformance with the Specific Plan, as provided in Section 6.3.3.1.B~~C~~. The development review process for projects proposed within the Campus Town Specific Plan Area is streamlined based on required conformance with the policies, Standards, and Guidelines established by the Specific Plan.

6.3.1 Administration and Interpretation

Approval of development within the Campus Town Specific Plan Area shall be subject to the review process set forth in this section.

A. Relationship to Seaside Municipal Code

The Campus Town Specific Plan constitutes the applicable zoning, including development standards and regulations, for development within the Specific Plan Area. Title 17 (Zoning) of the Seaside Municipal Code (SMC) shall apply only to matters not covered in this Specific Plan. If there is any conflict or inconsistency between the provisions of this Specific Plan and the SMC (including without limitation Municipal Code Section 8.54.070 (Trees), Title 17 (Zoning) and/or Title 16 (Subdivisions)), the provisions of this Specific Plan shall take precedence. All applicable state and federal standards and codes also apply to development within the Specific Plan Area. The Zoning Administrator or designee shall prepare a report on trees and views based on these plans and site inspection of the land.

1. Tree Removal and Replacement. Each Development Application shall specify any tree to be removed or altered and shall demonstrate compliance with the Coast Live Oak and Monterey Cypress tree replacement policies in this Specific Plan. Such application shall identify the Lot or off-site location on which the tree is located, or to be planted, provide a perimeter outline of an existing or proposed building on the Lot, specify the location of the tree, and furnish a brief statement of the reason for the request. The following finding must be made if it is determined that any of the trees recommended for preservation should be removed: the preservation of the tree(s) would impair the implementation of the Base Reuse Plan, the General Plan, and/or the Specific Plan on the site in question, and/or the preservation is not feasible due to the health of the tree (including disease or pests). Final approval of a Conformance Determination with respect to any Development Application indicating any trees to be removed shall constitute a permit to remove or alter any trees so designated, subject to tree replacement requirements solely to the extent required by Section 3.5 of this Specific Plan. Appeal of such permit shall be subject to the same provisions as appeal of a Conformance Determination, as provided herein.
2. Subdivisions. Unless otherwise specifically provided for in this Specific Plan, the regulations set forth in Title 16 (Subdivision) of the SMC, entitled "Subdivisions," shall apply to all divisions of land hereafter made of property within the Campus Town Specific Plan Area. Subdivision will be accomplished through recordation of multiple phased maps to facilitate the full implementation and buildout of the Specific Plan Area. Phasing plans shall provide all infrastructure necessary to support each phase in substantial conformance with the Specific Plan.

B. Administration of Specific Plan

The primary administrator of this Specific Plan is the City's Zoning Administrator. Following review of each Development Application as provided herein, the Zoning Administrator shall have authority over approval of Development Applications, as provided in Section 6.3.3.1.B~~C~~. The Zoning Administrator shall have the responsibility to interpret the provisions of the Specific Plan. If an issue or situation arises that is not sufficiently provided for in the

Specific Plan, the Zoning Administrator shall be guided by the purpose, goals, and policies of the Specific Plan and the interpretation provisions of the Title 17 (Zoning) of the SMC.

6.3.2 ~~Peer Review~~ Intentionally Omitted

~~All Development Applications shall be subject to review by a Peer Reviewer appointed by the Zoning Administrator. The Peer Reviewer shall at a minimum be a licensed architect, doing business within 75 miles of the City of Seaside.~~

6.3.3 Development Applications

6.3.3.1 Application Procedures

The applicant shall submit a Development Application to the Planning Division consistent with the SMC.

A. Submittal Requirements

For each Development Application, the applicant, at its election, may submit a Development Application for Substantial Conformance Review in either a single step or a two-step process~~, pursuant to Section 6.3.2.1.C below~~. If an applicant selects a single step process, the Development Application submittal requirements shall be those set forth in Section 6.3.~~2~~3.1.A.2 for Final Substantial Conformance Review; if an applicant selects a two-step process, the Development Application submittal requirements shall be those set forth in Section 6.3.~~2~~3.1.A.1 for Preliminary Substantial Conformance Review~~ and those set forth in section 6.3.2.1.B.2 for Final Substantial Conformance Review~~.

1. Submittal Requirements for Preliminary Substantial Conformance Review are as follows:
   a. ~~CD or other electronic format Containing d~~Digital files of all materials listed below~~:~~
   b. APPLICATION – One (1) copy
   c. SCHEMATIC DESIGN PLANS – One (1) full-size 24"X 36" set and two (2) 11"X 17" reductions.
   d. COVER SHEET
      - Applicant name, address and phone number.
      - Project site address, or map of all sites where this building is to be constructed.
      - Vicinity Map 1/2 mile radius street system with project site(s) highlighted.
      - Total ~~minimum~~ area of site in square feet.
      - Applicable Building Types and Frontage Types per Sections 4.6.2 and 4.6.3, respectively.
      - Number of proposed new buildings with total square footage for each (including parking structures).
      - Square footage for each building's footprint and the maximum percentage of the site covered by the building(s).
      - Number of stories for each building.
      - Number of parking and loading spaces and garage tiers, if provided in a structure.
      - Landscaped areas and percentage of the total site dedicated for landscaping (typical).
      - Paved area and percentage of the total site dedicated for hardscape/paving (i.e., driveways, walkways, courtyards, and trash storage) (typical).
      - Existing Regulating Plan designation, Sub-Area

designation, and Sign District designation.

- Number of pages included in the plan set.

e. SITE PLAN: Proposed site plan, including existing buildings within one block of the Lot Line, in all directions.

f. SCHEMATIC PROJECT SITE PLAN

- Lot Lines.
- Setbacks (Front Yard and Side Street Setbacks measured from face of curb).
- Internal and external rights-of-way and any vehicular access or other easements, including new Streets and Alleys.
- Sidewalk/planter dimensions (from face of curb to back of sidewalk).
- Existing buildings (if applicable) to be retained and proposed building locations and dimensions with uses labeled.
- Location and purpose of proposed open space.
- Location of structures on adjacent properties and their uses (if applicable).
- Topography and/or any existing site-specific conditions that must be addressed.
- Dimensions of driveway widths, existing and proposed curb cuts, parking spaces (use arrows to indicate traffic circulation).
- Sidewalks and walkways (include existing and proposed).
- Walls and fences (include materials and dimensions for existing and proposed). Indicate walls and fences to be removed (where applicable).
- Preliminary location of all exterior mechanical equipment.
- Street lights (where applicable).
- Trees: show existing trees with accurate canopies and overlap, if any, between proposed building footprints and canopy/root system of existing street trees.
- Preliminary joint trench and utility plan that includes conceptual location of electrical vault (where applicable), gas and electrical meters, fire sprinkler valves, backflow preventer, HVAC condensers, etc.

g. SCHEMATIC FOOTPRINTS: Existing (if to be retained) and proposed building footprints, including perimeter dimensions and openings in exterior walls.

h. SCHEMATIC ROOF PLAN: Roof pitch and material.

i. SCHEMATIC ELEVATIONS

- Building elevations (in color and black and white)
- Building heights in stories
- Proposed materials
- Proposed locations of signs

j. SCHEMATIC SITE/BUILDING SECTIONS

- In the case of a housing unit to be repeated - provide examples representing the range of Thoroughfare types or public spaces it is intended to front.

k. PRELIMINARY LANDSCAPE PLAN

- Softscape (including trees and shrubs) showing typical conditions.

- Hardscape (identify proposed materials) showing typical conditions.
- Preliminary Landscape Palette.

l. FIRE MASTER PLAN to show how the proposed project reduces the risk from wildfires.

m. CONCEPTUAL GRADING PLAN: Show all typical cases and cuts and fills needed

n. DIGITAL MASSING MODEL simple digital building form/massing model of the project. Internal building elements, landscaping, people, cars, etc. not required.

2. Submittal Requirements for Final Substantial Conformance Review are as follows:

a. RESPONSE TO PRELIMINARY SUBSTANTIAL CONFORMANCE REVIEW COMMENTS (if applicable). Point by point reference guide citing to the specific plan sheets that respond to comments provided at the conclusion of the Preliminary Substantial Conformance Review process.

b. FINAL DESIGN PLANS – One (1) full-size 24"X 36" set and two (2) 11"X 17" reductions.

c. ~~CD or other electronic~~ The following in digital format~~,~~:
APPLICATION, COVER SHEET, SITE PLAN, PROJECT SITE PLAN, FLOOR PLANS, ROOF, PLAN, ELEVATIONS, SITE SECTIONS, FIRE MASTER PLAN, GRADING PLAN, DIGITAL MASSING MODEL, as required for Preliminary Substantial Conformance Review, except that all schematic items for Preliminary Substantial Conformance Review must be in final form for Final Substantial Conformance Review.

d. BUILDING SECTIONS (cross and longitudinal)

- Building walls
- Freestanding walls
- Floor-to-floor dimensions

e. DESIGN DETAILS

- Gutters and downspouts (indicate the location and colors of gutters and downspouts on the building elevations).
- Mechanical plans showing locations of exterior equipment, through-the-wall vents, and ventilation shafts.

f. LANDSCAPE PLAN

- Planting plan showing location, spacing, common name, botanical name, container size, quantity of all proposed new plant material with distinct plant symbols for each specimen.
- Landscape layout plan for construction, including dimensions, materials, and finishes (drawings, catalog cuts, and/or photographs and an existing installation).
- Hardscape details (including paving, trash enclosure, raised planters, water features, fences, walls, site furniture, etc.).
- Exterior lighting (including type of fixture and catalog cut sheets)
- Tree inventory of all trees with a 4-inch diameter or greater.

g. EXTERIOR SIGNS AND OTHER GRAPHICS

- Location, dimensions, type (including illuminated or non-illuminated) and use (i.e., building sign, tenant sign, wayfinding sign).

- Include light fixtures, electrical raceways (conduit), and all other designs, materials, lettering font, graphics, and colors used as identification or for calling attention to the project or tenant. Include color and material samples on the color and material board.

h. COLORS AND MATERIALS ~~BOARD~~

~~One (1) 11"x 17" copy.~~

- ~~Identify board with project address, architect name, address, telephone number, email address, and date. Include samples of all proposed exterior materials, paint colors, and materials for glazing and paving (except clear glass).~~
- Identify all samples with manufacturer name and item specification number (including catalog cut – photographs of existing installation may be accepted in place of project literature).

i. FIRE MASTER PLAN to show how the proposed project reduces the risk from wildfires

j. GRADING PLAN

k. PHASING PLAN (for multi-phased projects)

l. DIGITAL MASSING MODEL Simple digital building form/massing model of the project. Internal building elements, landscaping, people, cars, etc. not required.

B. ~~Completeness~~ Review

The Zoning Administrator shall review each Development Application for completeness/conformance in accordance with ~~the Permit Streamlining Act and the~~ SMC provisions ~~regarding review for completeness~~.

~~C. Substantial Conformance Review~~

~~Following a determination that the Development Application is complete, the Zoning Administrator and his or her designee shall conduct "Substantial Conformance Review." Substantial Conformance Review~~ This shall consist of an evaluation by the Zoning Administrator ~~with input from the City's Peer Reviewer~~ of whether each complete Development Application is (i) consistent with the General Plan; (ii) in Substantial Conformance (as defined below) with this Specific Plan; and (iii) in compliance with applicable law. A Development Application is in "Substantial Conformance" with the Specific Plan if it substantially conforms with the Standards of the Specific Plan (including the applicable Land Use and Sub-Area Standards) and does not materially conflict with the applicable Guidelines of the Specific Plan.

During ~~Substantial Conformance~~ Review, the Zoning Administrator~~, Peer Reviewer~~ and the applicant shall work collaboratively to address any comments that the Zoning Administrator ~~and the Peer Reviewer~~ may have on the Development Application ~~with respect to Substantial Conformance,~~ such that the applicant is provided with opportunities to respond to the comments and to facilitate the ~~Substantial Conformance~~ Review within the time periods provided for in this Section.

At the end of the ~~Substantial Conformance~~ Review~~, and no later than 30 days after the a Development Application is deemed complete in accordance with Section 6.3.31.B,~~ the Zoning Administrator shall provide the applicant with a written determination ("Conformance Determination") of whether the Development Application is (i) consistent

with the General Plan; (ii) in Substantial Conformance with this Specific Plan; and (iii) in compliance with applicable law. ~~A Conformance Determination by the Zoning Administrator shall not require notice or a public hearing.~~

If the Review ~~Conformance Determination~~ indicates that the Development Application is (i) consistent with the General Plan; (ii) in Substantial Conformance with this Specific Plan; and (iii) in compliance with applicable law, the Zoning Administrator shall approve the Development Application. ~~Notice of the Zoning Administrator's approval shall be provided as an informational item on the agenda for the next regularly scheduled public meeting of the Zoning Administrator. The public's right to appeal and procedures to do so shall be posted on the agenda for the public meeting.~~

If the Review ~~Conformance Determination~~ indicates that the Development Application is not (i) consistent with the General Plan, (ii) in Substantial Conformance with this Specific Plan, and/or (iii) in compliance with applicable law, the Conformance Determination shall include an explanation of the Zoning Administrator's findings regarding any such inconsistency, lack of Substantial Conformance (including findings regarding qualification for a Minor Deviation pursuant to Section 6.3.3.2.A or Deviation pursuant to Section 6.3.3.2.B), and/or noncompliance, and a description of changes that would be necessary to bring the Development Application into consistency/Substantial Conformance/compliance. In such case, the ~~Zoning Administrator shall disapprove the Development Application and the~~ applicant may (1) revise the Development Application to achieve the required consistency/Substantial Conformance/compliance and resubmit the Development Application for another Review ~~Conformance Determination~~ following the process described above; (2) apply for a Minor Deviation or Deviation; or (3) appeal the Zoning Administrator's denial of the Development application. The ~~Conformance~~ Determination of the Zoning Administrator may be appealed to the Planning Commission and subsequently to the City Council pursuant to the procedures of the City's Zoning Code, regarding Appeals.

Any approval of a Development Application not exercised within two years after final approval shall expire and become void, except where an extension of time is approved as specified in the SMC or as otherwise provided for in a Development Agreement. After it has been exercised (meaning that construction plans have been submitted and have not expired ~~and/or construction has commenced~~), a Development Application approval shall remain valid and run with the land in accordance with the Specific Plan.

6.3.3.2 Deviation Procedures

The Specific Plan is a policy and planning framework for the ultimate buildout of the Specific Plan Area. Implementation of the Specific Plan requires a degree of flexibility to respond to site, market, and other factors that may arise in connection with specific development proposals. In order to ensure that implementation of the Specific Plan is feasible and to preserve the opportunity for variations that will result in superior development, the City may approve deviations from Specific Plan Standards and Guidelines as set forth in this Section 6.3.3.2.
A deviation will be considered a Minor Deviation or a Deviation, as defined below.

A. Minor Deviations.

1. Minor Deviations are variations to the Specific Plan Standards and Guidelines that do not materially affect the objectives of this Specific Plan and are minor in light of the Specific Plan as a whole. Minor Deviations do not constitute or require an amendment to the Specific Plan. If the Zoning Administrator deems a deviation to not be a Minor Deviation, the Development Application shall be processed as a Deviation pursuant to Section 6.3.3.2.B below.
2. Upon written request by an applicant, the Zoning Administrator may approve, conditionally approve, or deny a Minor Deviation without public notice or a public hearing~~, in which case the decision of the Zoning Administrator shall be reported as an information item on the agenda for the next regularly scheduled public meeting of the Zoning Administrator.~~ Alternatively if the Zoning Administrator determines that the Minor Deviation is of significant public interest or raises significant policy issues, the Zoning Administrator may refer the Minor Deviation to the Planning Commission for a noticed public hearing. The following constitute examples of Minor Deviations:
   a. To allow walls or fences to exceed the Height limit described herein by a maximum of two feet.
   b. To allow a decrease not exceeding 10 percent of the required area for landscape coverage.
   c. To allow a decrease not exceeding 10 percent of the minimum lot dimensions described in Chapter 4.6.2.
   d. To allow an increase or decrease not exceeding 10 percent of minimum and maximum required front setbacks.
   e. To allow an increase not exceeding 10 percent of maximum height.
   f. To allow a decrease in required number of parking spaces based on quantifiable information provided by the applicant regarding shared parking, reduced demand, or alternative mobility strategies.
   g. Deviations of a similar nature to those listed above that are deemed minor by the Zoning Administrator that are in keeping with the intent and objectives of this Specific Plan.
3. In approving a Minor Deviation, the Zoning Administrator or the Planning Commission, as applicable, may impose conditions as deemed necessary to protect the public's health, safety and welfare, and to assure compliance with the objectives of the Specific Plan.

4. The Zoning Administrator's determination on a Minor Deviation may be appealed to the Planning Commission pursuant to the appeal procedures of the Zoning Code. A decision of the Planning Commission on a Minor Deviation may be appealed to the City Council pursuant to the appeal procedures in the Zoning Code.

B. Deviations

1. Deviations are variations from the Standards or Guidelines of this Specific Plan that do not constitute Minor Deviations, but nonetheless do not materially affect the objectives of this Specific Plan. Applications for a Deviation shall be subject to review and approval by the Planning Commission following a noticed public hearing, and subject to appeal to the City Council in accordance with the appeal procedures of the City's Zoning Code. The Planning Commission (or the City Council on appeal) shall approve a Deviation if it makes the following findings:
   a. The Deviation is consistent with the goals and policies of the Specific Plan.
   b. The Deviation is not detrimental to public health, safety or welfare.
   c. The Deviation does not create a nuisance or hazard.
   d. The Deviation does not have a significant adverse effect on adjoining properties or the immediate neighbors.
2. In approving a Deviation, the Planning Commission (or the City Council on appeal) may impose conditions as deemed necessary to protect the public's health, safety and welfare, and to ensure compliance with the objectives of the Specific Plan.

6.3.3.3 Amendment Procedures

This Specific Plan can be amended pursuant to the provisions of the California Government Code (Sections 65453-65454). Amendments to the Specific Plan may be done by Resolution of the City Council. Procedures of the SMC shall be followed for hearing, notice, and decision of a Specific Plan amendment.

6.3.4 Fees and Taxes

The City requires the payment of development impact fees and certain taxes to finance public improvements. The City also requires the payment of processing fees to offset the cost of processing Development Applications. Fees for development within the City apply to projects within the Campus Town Specific Plan Area, subject to any applicable Development Agreement. These fees include:

- Public Land Dedication
- School Land Dedication
- Park Development Fee
- Water and Sewer Tap Fees
- Potable Irrigation